SBE 11plus V2
DECK UNIT

For use with the SBE 9plus CTD

Serial Number: 11P12293-0426

User Manual, Version 012

Sea-Bird Electronics, Inc.
1808 136th Place NE
Bellevue, Washington 98005 USA
Tel: 425/643-9866
Fax:425/643-9954

This page Intentionally Left Blank.

SBE 11plus DECK UNIT OPERATING AND REPAIR MANUAL

TABLE OF CONTENTS

Manual Generation Date..... 1

Limited Liability Statement..... 2

Configuration..... 4

Manual - 11plus Version 012..... 6

Appnote 11S Biospherical Surface PAR..... 85

Appnote 68 USB Ports..... 87

Drawings..... 88

Warranty..... 119

Service Request Form..... 121

SEA-BIRD ELECTRONICS, INC.
1808 136th Place NE
Bellevue, Washington 98005 USA
Phone: (425) 643 9866
Fax: (425) 643 9954
Email: seabird@seabird.com

Manual Generation Date: 06 March 2009

LIMITED LIABILITY STATEMENT

Extreme care should be exercised when using or servicing this equipment. It should be used or serviced only by personnel with knowledge of and training in the use and maintenance of oceanographic electronic equipment.

SEA-BIRD ELECTRONICS, INC. disclaims all product liability risks arising from the use or servicing of this system. SEA-BIRD ELECTRONICS, INC. has no way of controlling the use of this equipment or of choosing the personnel to operate it, and therefore cannot take steps to comply with laws pertaining to product liability, including laws which impose a duty to warn the user of any dangers involved in operating this equipment. Therefore, acceptance of this system by the customer shall be conclusively deemed to include a covenant by the customer to defend, indemnify, and hold SEA-BIRD ELECTRONICS, INC. harmless from all product liability claims arising from the use of servicing of this system.

This page intentionally left blank.

SYSTEM CONFIGURATION 10 March 2009

SBE 11plus CTD Deck Unit	**S/N 11P12293-0426**
AC Supply Voltage	**115/230 VAC / 50-400 Hz**
Sea Cable Voltage	**250 VDC**
Receiver Board Microcontroller Version	**2.1**
Remote Output EPROM Version	**1.0**
Primary Conductivity Advance - Factory Setting	**0.073 seconds**
Secondary Conductivity Advance - Factory Setting	**0.073 seconds**

Modem interface installed (Mult-Rosette Capable)
Modem Board Microcontroller Version **2.0C, P/N 11130**

Bottom Contact Alarm installed

Surface PAR Interface and Connector Installed

NMEA 0183 GPS Navigation Interface Installed

Remote Output Interface and Connector Installed

BAUD RATES:

SBE 11plus CTD Data	**19,200**
SBE 11plus Duplex Modem	**300**
SBE 11plus 9600 BAUD Uplink Modem	**19,200**
SBE 11plus NMEA Interface	**4800**
SBE 11plus Remote Output	**9600**

This page intentionally left blank.

SBE 11*plus* V2
Deck Unit

For use with SBE 9plus CTD

User's Manual

Sea-Bird Electronics, Inc.
1808 136th Place NE
Bellevue, Washington 98005 USA
Telephone: 425-643-9866
Fax: 425-643-9954
E-mail: seabird@seabird.com
Website: www.seabird.com

Manual Version #012, 09/05/08
PCB Firmware Versions:
Digital - 5.2 and later
Modem - 2.0c and later
Receiver - 2.1 and later
Remote Output - 1.0 and later
Software Versions:
SEASAVE V7 version 7.18 and later
SBE Data Processing version 7.18 and later

Limited Liability Statement

Extreme care should be exercised when using or servicing this equipment. It should be used or serviced only by personnel with knowledge of and training in the use and maintenance of oceanographic electronic equipment.

SEA-BIRD ELECTRONICS, INC. disclaims all product liability risks arising from the use or servicing of this system. SEA-BIRD ELECTRONICS, INC. has no way of controlling the use of this equipment or of choosing the personnel to operate it, and therefore cannot take steps to comply with laws pertaining to product liability, including laws which impose a duty to warn the user of any dangers involved in operating this equipment. Therefore, acceptance of this system by the customer shall be conclusively deemed to include a covenant by the customer to defend, indemnify, and hold SEA-BIRD ELECTRONICS, INC. harmless from all product liability claims arising from the use or servicing of this system.

Table of Contents

Section 1: Introduction 5
About this Manual 5
How to Contact Sea-Bird 5
Unpacking SBE 11*plus* V2 6

Section 2: Description of SBE 11*plus* V2 7
System Description 7
Deck Unit Specifications 8
System Communications 9
Deck Unit Front Panel 10
Deck Unit Back Panel 12

Section 3: Mounting and Wiring System 13
Mounting Deck Unit 13
Wiring System 13

Section 4: Installing and Using Sea-Bird Software 16
Installing Software 16
Using SEATERM 17
Using SEASAVE 19
Using SBE Data Processing 21

Section 5: Setting Up System 23
Setting Operating Parameters in SEATERM 23
Commands Entered with SEATERM 24
Setting Up CTD Configuration (.con) File in SEASAVE 26

Section 6: Setting Up NMEA Interface 28
NMEA Interface Commands 29
Commands Sent by User with SEATERM 29
Commands Sent Automatically by SEASAVE 29
Setting Up NMEA in SEATERM 30
Setting Up and Testing NMEA in SEASAVE 31
Troubleshooting NMEA Interface 32
NMEA Message Simulation Program 32
NMEA Navigation Device Message and Data Formats 34
Message Formats 34
Data Formats 35

Section 7: Setting Up Surface PAR 36
Surface PAR Commands 36
Setting Up Surface PAR and Adjusting for Drift in SEATERM 36
Setting Up CTD Configuration (.con) File in SEASAVE 37
Surface PAR Data Format 37

Section 8: Setting Up Remote Output 38
Pressure Frequency and Pressure Temperature 38
Converted Data Output (CDO) 39
Calibration Coefficients and PROG11V2 39
Configuring CDO 40
CDO Commands Entered with SEATERM 41
Converted Data Output Data Format 45

Section 9: Setting Up Water Sampler 46
Setting Deck Unit Modem PCB Dip Switches 46
Setting Up Water Sampler in SEASAVE 47

Section 10: Setting Up RS-232 Serial Data Uplink 49

Serial Data Output Instrument Requirements 49
SBE 9*plus* CTD Requirements 50
SBE 11*plus* V2 Deck Unit Requirements 50
System Limitations 50
Theory of Operation.....51

Section 11: Operating System 52

Acquiring Real-Time Data and Firing Bottles from SEASAVE.....52
Firing Bottles from Deck Unit Front Panel.....54
Processing Data.....55

Section 12: Data Formats 56

Deck Unit LED Display Format 57
Raw Output Data Format 58
IEEE-488 Output 58
RS-232 Output.....59
Calculation of Engineering Units in SEASAVE.....60
Calculation of Engineering Units in SBE Data Processing.....60

Section 13: Troubleshooting..... 61

Problem 1: SEASAVE Does Not Collect Any Data 61
Problem 2: Deck Unit Completely Inoperable.....61
Problem 3: Deck Unit Overflow Light on.....62
Problem 4: CTD Does Not Respond.....63
Problem 5: Data LED Does Not Turn On.....63
Problem 6: RS-232 Interface Not Working 64
Problem 7: IEEE-488 Interface Not Working.....64
Problem 8: Tape Recorder Interface Not Working 65
Problem 9: Modem Channel Not Working 65

Glossary 67

Appendix I: Command Summary 68

Appendix II: Commands Sent Automatically by SEASAVE..... 70

Appendix III: Functional Description and Circuitry 72

Deck Unit Data Interfaces.....72
Data Telemetry Receiver 72
Deck Unit Modem 72
Deck Unit Power.....74
Sea Cable Supply 74
Deck Unit Cooling 74
Tape Recorder/VCR Interface 74
Circuitry.....74

Appendix IV: Replacement Parts..... 77

Index..... 78

Section 1: Introduction

This section includes contact information and photos of a standard SBE 11*plus* V2 shipment.

About this Manual

This manual is to be used with the SBE 11*plus* V2 Deck Unit.

It is organized to guide the user from installation through operation. We've included detailed specifications, setup and operation descriptions, and helpful notes throughout the manual.

Sea-Bird welcomes suggestions for new features and enhancements of our products and/or documentation. Please e-mail any comments or suggestions to seabird@seabird.com.

How to Contact Sea-Bird

Sea-Bird Electronics, Inc.
1808 136th Place Northeast
Bellevue, Washington 98005 USA

Telephone: 425-643-9866
Fax: 425-643-9954
E-mail: seabird@seabird.com
Website: http://www.seabird.com

Business hours:
Monday-Friday, 0800 to 1700 Pacific Standard Time
(1600 to 0100 Universal Time)
Except from April to October, when we are on *summer time*
(1500 to 0000 Universal Time)

Unpacking SBE 11*plus* V2

Shown below is a typical SBE 11*plus* V2 shipment. Inclusion of test cables, cables for optional interfaces, etc. is dependent on the order.

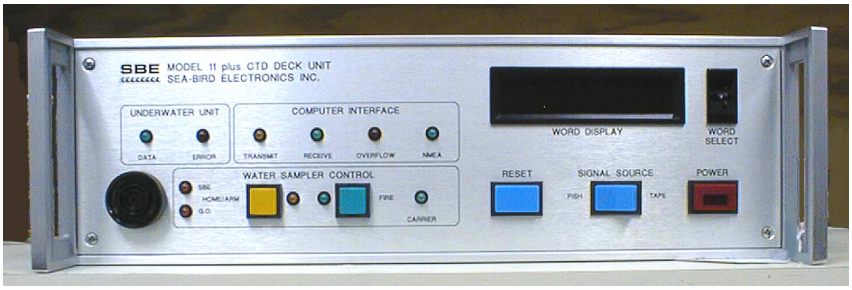

SBE 11*plus* V2 Deck Unit

Rack mount kit
(screws not shown)

Deck Unit power cable

Computer to Deck Unit cable for *SBE 11 Interface (RS-232)* and *Modem Channel* connectors (2 cables / Deck Unit)

Deck Unit to 9*plus* test cable

25-pin to 9-pin adapter
(for use with computer with DB-25 connector;
4 adapters/Deck Unit)

Spare connector & hardware kit
(*Sea Cable*, *NMEA*, &
Surface PAR connectors)
(1 connector & hardware shown)

NMEA Interface test cable

CDO *Remote Out*
Interface test cable

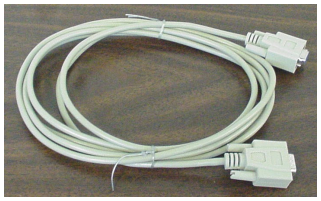

9600 Baud Uplink
Interface cable

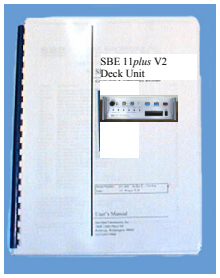

Deck Unit Manual

Software, and Electronic Copies of
Software Manuals and User Manual

Section 2: Description of SBE 11*plus* V2

This section describes the functions and features of the SBE 11*plus* V2 Deck Unit, as well as system communications.

System Description

Notes:
- When the 9*plus* CTD is used with the 11*plus* V2 Deck Unit, the system is often referred to as the **911*plus***.
- It is possible to use the SEARAM to record 9*plus* data in memory at the same time as 9*plus* data is transmitted real-time through the Deck Unit. This provides a data back-up in case there are data transmission problems over the sea cable. See the 9*plus* manual for wiring and deployment details.

Note:
The 300 baud modem interface, now standard in both the Deck Unit and CTD, was optional in Deck Units with serial number 700 and lower and in 9*plus* CTDs with serial number 785 and lower.

Note:
The RS-232 Serial Data Uplink interface is standard on all Deck Units with serial number 637 and higher; **however, the 300 baud modem interface must also be installed in the Deck Unit for the serial data uplink to be operational**. For older units, the interface was included only if the user ordered the Deck Unit with the option.

The SBE 9*plus* CTD is used with the SBE 11*plus* V2 Deck Unit for real-time data acquisition, or with the SBE 17*plus* V2 SEARAM for in-situ recording. **This manual covers the use of the 11*plus* V2 Deck Unit with the 9*plus*.**

The rack-mountable Deck Unit supplies DC power to the CTD, decodes the serial data stream, and passes the data to a computer (in IEEE-488 or RS-232 format). The Deck Unit's back-panel switch permits operation from 120 or 240 VAC 50/60 Hz input power. The front panel provides numeric display of frequency and voltage data via a thumbwheel switch and 8-digit LED readout. Other features include:

- **300 baud modem interface** - provides power and real-time control for a water sampler (SBE 32 Carousel, or G.O. 1015 or 1016 Rosette) or remote serial output device. The modem permits water sampler control through the Deck Unit or via SEASAVE software. Bottles may be fired sequentially or (SBE 32 and G.O. 1016 only) in any order.
  The interface must be installed in the Deck Unit and CTD.
  Additional information:
  - SBE 32 Carousel - 911*plus* is compatible with full size (SBE 32) and compact (SBE 32C) Carousel sizes.
  - G.O. 1015 - Deck Unit must also have optional 1015 control module.
- **NMEA Interface** that merges position data with the CTD data. The NMEA Interface decodes messages that are output from navigation devices supporting NMEA 0183 protocol. Decoded Latitude and Longitude are appended to the CTD data stream in the Deck Unit, and are passed to the computer for storage and display with the CTD data.
- **A/D converter for a Surface PAR light sensor**. The Deck Unit supplies 12 volts to power the sensor, and merges the PAR data with the CTD data.
- **Tape recorder interface** for recording the digital data stream on an audiocassette recorder or VCR.
- **Remote output**. The Deck Unit provides two remote outputs -
  - Pressure frequency and pressure temperature, transmitted 24 times per second, can be used to control a towed vehicle.
  - Any combination of temperature, conductivity, pressure, depth, salinity, sound velocity, and altimeter height, in engineering units. A limited set of these parameters can be displayed on an SBE 14 Remote Depth Readout or SBE 46 LCD Display Box.
- **Audible alarm**, which sounds based on data from the CTD pressure sensor, data from a bottom contact switch connected to the CTD, and/or data from an altimeter connected to the CTD.
- **RS-232 Serial Data Uplink interface** - provides RS-232 output from the Deck Unit for data from a remote serial output device connected to the CTD. **The interface must also be installed in the CTD, and is included in the CTD only if ordered with the option**.

Notes:
- Help files provide detailed information on SEATERM, SEASAVE V7, and SBE Data Processing.
- NMEATest, a NMEA navigation device simulation program, is part of the SBE Data Processing installation.
- Separate software manuals on CD-ROM contain detailed information on the setup and use of the software.
- Sea-Bird also supplies an older version of SEASAVE, SEASAVE-Win32. However, all SEASAVE instructions in this manual are written for SEASAVE V7. See SEASAVE-Win32's manual and/or Help files if you prefer to use the older software.

The Deck Unit is supplied with a powerful Windows 2000/XP software package, SEASOFT-Win32, which includes:

- **SEATERM** – terminal program for easy setup.
- **SEASAVE V7** – program for acquiring, converting, and displaying real-time or archived raw data.
- **SBE Data Processing** – program for calculation and plotting of conductivity, temperature, pressure, auxiliary sensor data, and derived variables such as salinity and sound velocity..

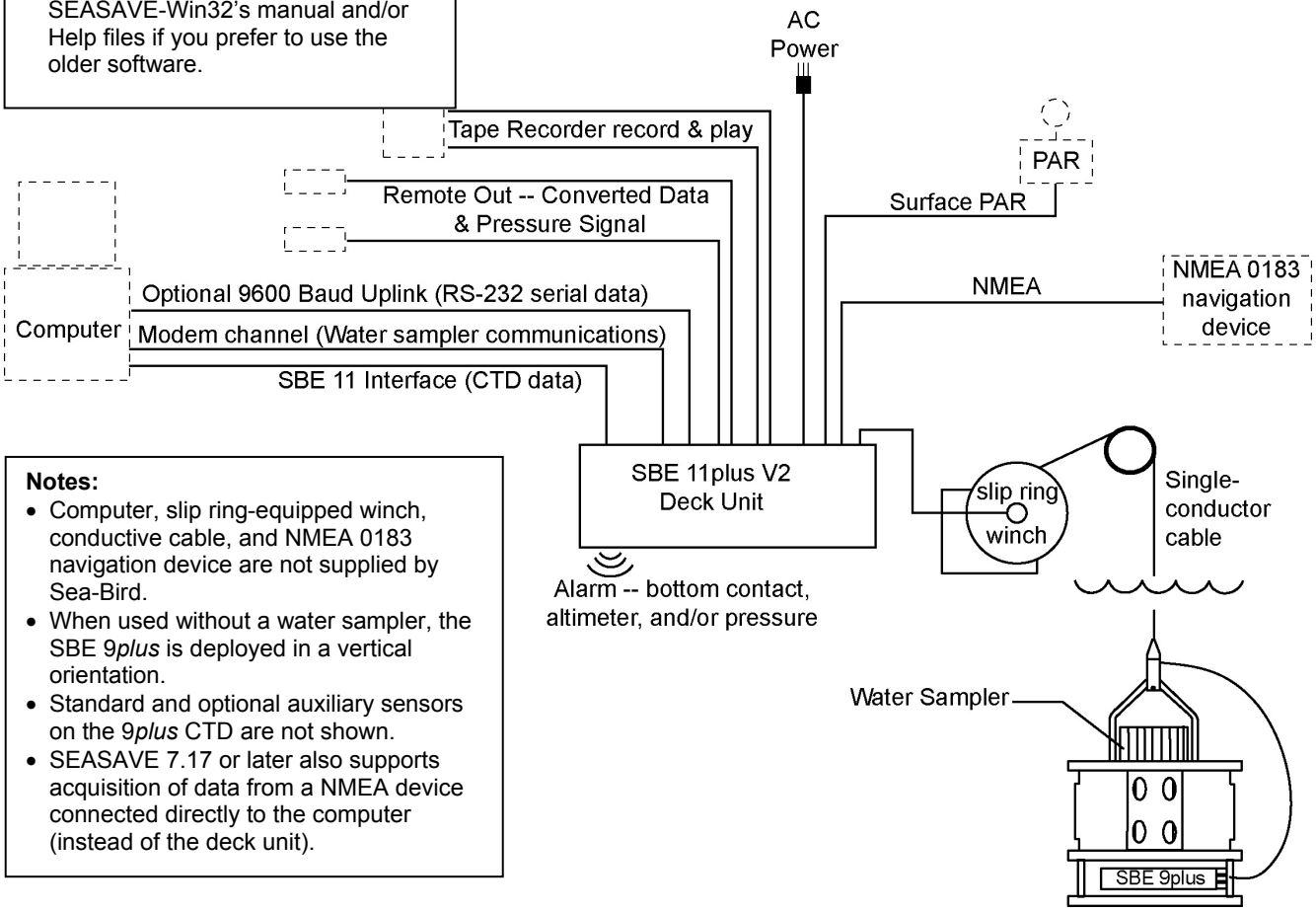

Notes:
- Computer, slip ring-equipped winch, conductive cable, and NMEA 0183 navigation device are not supplied by Sea-Bird.
- When used without a water sampler, the SBE 9*plus* is deployed in a vertical orientation.
- Standard and optional auxiliary sensors on the 9*plus* CTD are not shown.
- SEASAVE 7.17 or later also supports acquisition of data from a NMEA device connected directly to the computer (instead of the deck unit).

Deck Unit Specifications

Power Requirements	120 VAC or 240 VAC 50/60 Hz (selectable)
Sea Cable Compatibility	Single or multi-core armored cable up to 10,000 meters (32,800 feet) long with inner core resistance of up to 350 ohms
Deck Unit Dimensions	132 x 432 x 432 mm (5.2 x 17 x 17 inch) cabinet with standard 19-inch (distance between centers of mounting holes) rack mounting brackets

System Communications

System communications are summarized below:

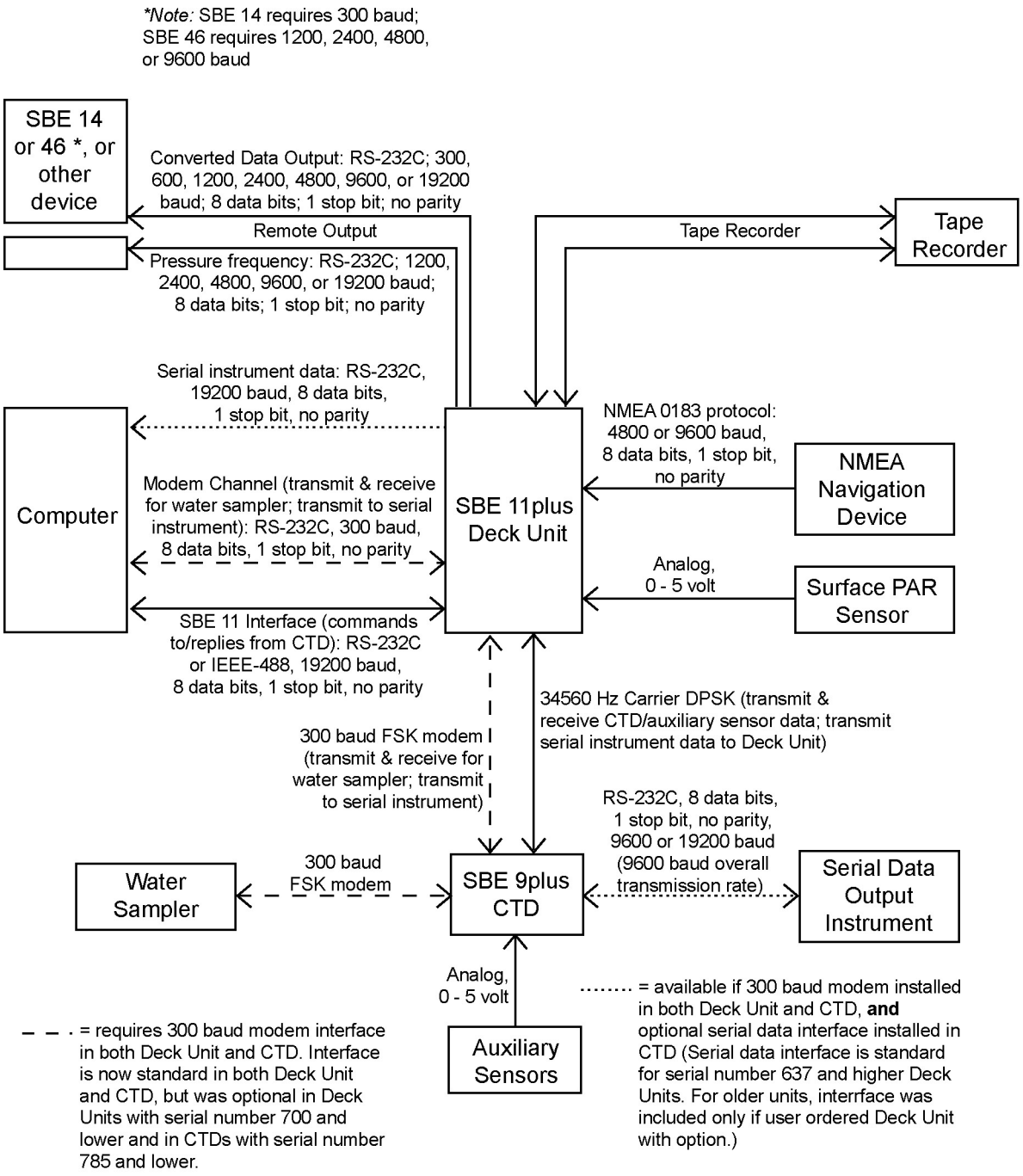

Note: A NMEA navigation device can be connected directly to the computer instead of to the Deck Unit. This feature is supported in SEASAVE V7 version 7.17 and later. The output from SEASAVE is the same, regardless of whether the NMEA data was appended in the Deck Unit or in the computer.

Deck Unit Front Panel

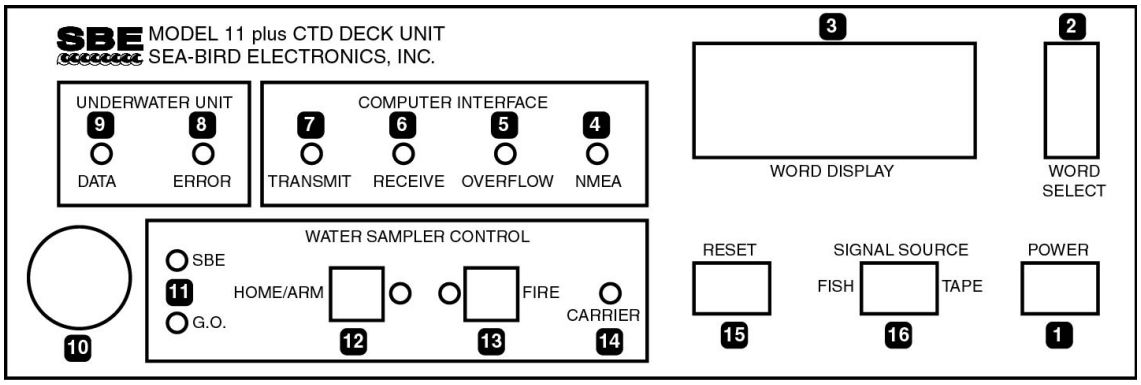

1 **Power** button - turns power to the Deck Unit on/off. When turned on, voltage is applied to back panel *Sea Cable* connector immediately.

2 **Word Select** thumbwheel switch - used to select any sensor channel, data buffer status, or other diagnostic indicators for LED display.

3 **Word Display** LED - used to view individual data words (uncorrected frequencies, A/D voltages, etc.) and data buffer status.

4 **NMEA** LED - flashes each time a NMEA message is successfully decoded.

5 **Overflow** LED - turns on when output buffer has overflowed because computer did not take data from Deck Unit (through IEEE-488 or RS-232 interface) quickly enough. When this occurs, some data has been irretrievably lost. LED stays on until Reset button is pushed or a reset command is received.

6 **Receive** LED - flashes when Deck Unit receives characters from computer over IEEE-488 or RS-232C interface.

7 **Transmit** LED - flashes when Deck Unit sends data to computer over IEEE-488 or RS-232C interface.

8 and 9 **Error** and **Data** LEDs - Data LED comes on and stays on to indicate Deck Unit is successfully receiving data from CTD at expected rate and format. Error LED flashes when data from the CTD is incorrect (that is, modulo count indicates a skipped scan). In general, if Data LED is on and Error LED is off, CTD and telemetry link are working properly.

10 **Alarm** buzzer - sounds based on alarm logic for bottom contact switch, altimeter, and/or pressure.

11 **SBE** or **G.O.** LED - Water sampler type is controlled by SW1 on the Deck Unit Modem PCB. If SW1 is set to SBE 32 Carousel, SBE LED comes on and stays on. If SW1 is set to General Oceanics 1015 or 1016 Rosette, G.O. LED comes on and stays on.

Note:
Water sampler bottles can also be fired from the computer using SEASAVE real-time data acquisition software or user-developed software.

12 and 13 **Home/Arm** and **Fire** pushbuttons and LEDs - operation varies, depending on water sampler type:

- ***SBE 32 Carousel*** -
  - Home/Arm button resets Carousel, so it will close bottle at position #1 next time Fire button is pushed. When confirmation is received from Carousel, Home/Arm LED comes on and stays on until you fire *first* bottle.
  - Fire button causes Carousel to fire, closing next position bottle. When confirmation is received from Carousel, Fire LED comes on and stays on until the next time you push Fire or Home/Arm button.
  - When Carousel is fired via software, Fire LED comes on for 5 seconds when confirmation is received.

- ***G.O. 1015 Rosette*** -
  - Home/Arm button powers Rosette. Home/Arm LED comes on 15 seconds later, when confirmation is received from Rosette, indicating pylon is powered and ready to fire. Home/Arm LED stays on until you push Fire button. **You must power Rosette each time you fire a bottle.**
  - Fire button causes Rosette to fire, closing next bottle. Fire LED comes on when confirmation is received from Rosette, and remains lit until Home/Arm is pushed again. **Fire button is active only when Home/Arm LED is lit.**
  - When Rosette is fired via software, Fire LED comes on for 5 seconds when confirmation is received.
- ***G.O. 1016 Rosette*** -
  - Home/Arm button resets Rosette, causing arm to move to Home position (ready to fire bottle #1) with an offset specified by SW1 on Deck Unit Modem PCB. When confirmation is received from Rosette, Home/Arm LED comes on and stays on until you fire *first* bottle.
  - Fire button causes Rosette to fire, closing next position bottle. When confirmation is received from Rosette, Fire LED lights comes on and stays on until the next time you push Fire or Home/Arm button.
  - When Rosette is fired via software, Fire LED comes on for 5 seconds when confirmation is received.

14 **Carrier** LED - turns on and stays on when Deck Unit modem (for communications with water sampler or remote serial instrument) detects signal from modem in CTD (i.e., CTD has modem interface and is connected to Deck Unit).

15 **Reset** button - resets system. Empties output buffers and halts input until instructions are received from computer. Always Reset before beginning a CTD cast; otherwise, first data sent to computer may be old data left over from end of a previous cast. SEASAVE performs this reset function automatically before beginning a cast.

16 **Signal Source** switch - place in Fish position when data is to be acquired from CTD. Place in Tape position when previously recorded data is to be played back from an audio recorder.

Deck Unit Back Panel

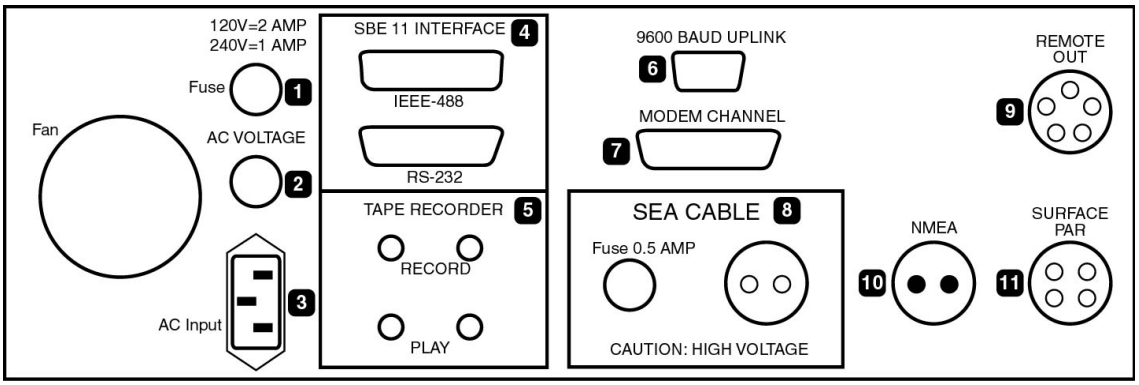

1 **Fuse** - 2 amp (for 120 V) or 1 amp (for 240 V).

2 **and** 3 **AC Voltage** Switch Selector and **AC Input** - select 120 VAC or 240 VAC 50/60 Hz.

4 **SBE 11 Interface** - Channel (IEEE-488 or RS-232) between *Deck Unit* and *computer* sends commands to and receives replies from CTD. Note that Sea-Bird's terminal program for setting up the system, SEATERM, works only with RS-232.

5 **Tape Recorder** - connects to an audio tape recorder or VCR. Connect tape recorder's Line In to Deck Unit *Record*. Connect tape recorder's Line Out to Deck Unit *Play*. Note that while Deck Unit has two *Record* and two *Play* jacks, these are internally connected in parallel. This permits a redundant connection to a typical recorder's stereo channels. Stereo connection is not mandatory; error-free recording can be expected even when using recorder's second channels for voice annotation or other purposes.

Note:
An 11*plus* V2 with jumpers set for serial data uplink (#6) cannot output data through *Tape Recorder* (#5). See *Section 10: Setting Up RS-232 Serial Data Uplink*.

6 **9600 Baud Uplink** (currently standard, optional on 11*plus* V2 with serial number 636 and lower) - provides RS-232 output from Deck Unit for an RS-232 instrument connected to CTD. Requires modem channel and jumper changes for operation.

7 **Modem Channel** (currently standard, optional on 11*plus* V2 with serial number 700 and lower) - Channel (RS-232) between *Deck Unit* and *computer* sends commands to and receives replies from water sampler.

8 **Sea Cable** - connects to CTD.

9 **Remote Out** - has two outputs:

A. Pressure frequency and pressure temperature, transmitted 24 times per second, intended to be used to control a towed vehicle.
B. Any combination of temperature, conductivity, pressure, depth, salinity, sound velocity, and altimeter height, in engineering units. A limited set of these parameters can be displayed on an SBE 14 Remote Depth Readout or SBE 46 LCD Display Box.

Note:
A NMEA navigation device can be connected directly to the computer instead of to the Deck Unit. This feature is supported by SEASAVE V7 version 7.17 and later; see *Setting Up CTD Configuration (.con) File in SEASAVE* in *Section 5: Setting Up System*. The output from SEASAVE is the same, regardless of whether the NMEA data was appended in the Deck Unit or in the computer.

10 **NMEA** - connects to a NMEA 0183 navigation device.

11 **Surface PAR** - connects to a Surface PAR sensor.

Section 3: Mounting and Wiring System

This section covers:

- Mounting the Deck Unit
- Wiring the system

Mounting Deck Unit

Detachable rack mount *ears* are provided for mounting the Deck Unit to standard 19-inch electronics bays.

Wiring System

WARNING!
Life threatening voltage (+250 VDC) is present on the sea cable when the Deck Unit is powered. This voltage persists for up to 1 minute after removing power. Verify that the Deck Unit is disconnected from the AC power source before connecting the sea cable to the Deck Unit. Unplug the AC power cord and wait 1 minute after power is removed before working on the Deck Unit sea cable connector or sea cable circuits.

Sea Cable from Deck Unit to CTD

Terminate the sea cable leads from the winch slip rings with the supplied MS connector (MS3106A12S-3P). Connect positive power (+, cable inner conductor) to pin B and negative power (-, cable armor) to Pin A. Connect to the *Sea Cable* connector on the Deck Unit back panel.

See the SBE *9plus* CTD manual for connection of the sea cable to JT1 on the CTD.

Computer to Deck Unit

Deck Unit communication with the computer is provided in two channels. The *SBE 11 Interface* channel (RS-232 or IEEE-488) sends commands to and receives replies from the CTD. The *Modem* channel (RS-232) sends commands to and receives replies from the water sampler and/or remote serial instrument (through the CTD). Connect the computer to *SBE 11 Interface* and *Modem Channel* on the Deck Unit back panel using the supplied cables.

NMEA Navigation Device to Deck Unit

Note:
A NMEA navigation device can be connected directly to the computer instead of to the Deck Unit. This feature is supported by SEASAVE V7 version 7.17 and later; see *Setting Up CTD Configuration (.con) File in SEASAVE* in *Section 5: Setting Up System*. The output from SEASAVE is the same, regardless of whether the NMEA data was appended in the Deck Unit or in the computer.

Connect the NMEA navigation device to the *NMEA* connector on the Deck Unit back panel with the supplied 2-pin MS connector (MS3106A12S-3S). The connector pin designations are:

Deck Unit	Function
Pin A	NMEA *A* (signal)
Pin B	NMEA *B* (signal return)

Surface PAR Sensor to Deck Unit

Connect the Surface PAR sensor to the *Surface PAR* connector on the Deck Unit back panel. A 4-pin MS-style connector (MS3106A14S-2P) was supplied if a cable was not provided. The connector pin designations are:

Deck Unit	Function	Biospherical Surface PAR Sensor with Switchcraft Connector
Pin A	Signal (ground)	Pin 3
Pin B	Power (+12 volts)	Pin 4
Pin C	Power (ground) - Deck Units with Digital PCB Assembly 40937C or greater use pin C. All previous versions do not use pin C.	Pin 1
Pin D	Signal	Pin 2
-	-	Pin 5

Note: Biospherical sold the Surface PAR sensor with other connector types in the past. See the appropriate drawing for pinout details if your sensor does not have a Switchcraft connector.

Deck Unit to Remote Output

Connect to the *Remote Out* connector on the Deck Unit back panel, which has two real-time outputs:

- Raw Pressure - Pressure frequency and pressure temperature, transmitted 24 times per second, intended to be used to control a towed vehicle.
- Converted Data Out (CDO) - Any combination of temperature, conductivity, pressure, depth, salinity, sound velocity, and altimeter height, in engineering units. A limited set of these parameters can be displayed on an SBE 14 Remote Depth Readout or SBE 46 LCD Display Box.

A 5-pin MS-style connector (MS3106A14S-5P) was supplied if a cable was not provided. The connector pin designations are:

Deck Unit	Function
Pin A	Ground
Pin B	CDO RS-232 receive
Pin C	CDO RS-232 transmit
Pin D	Raw pressure RS-232 transmit
Pin E	Power (+12 VDC)

Deck Unit to RS-232 Uplink

Connect a computer to the *9600 Baud Uplink* DB-9S connector on the Deck Unit back panel, using the supplied cable. The connector pin designations are:

Deck Unit	Function
Pin 3	Transmit to PC
Pin 5	Common

CTD to Auxiliary Sensors and Water Sampler

See the SBE 9*plus* CTD manual for details on wiring of the CTD to auxiliary sensors.

For wiring of the CTD to the water sampler:

- **SBE 32 Carousel** - Connect the CTD's 6-pin top center JT7 connector to the 6-pin bulkhead connector at the bottom of the Carousel electronics housing with the 6-pin to 6-pin jumper cable (17198).
- **G.O. 1015 Rosette** - Connect the CTD's 3-pin JT4 connector to the Rosette. The G.O. 1015 has 2 polarity settings, *normal* and *reverse*, which refer to the sea cable polarity. Most commonly, it is set to *reverse*, especially when used with a MK III CTD. The *9plus* CTD can be used with the G.O. 1015 in either setting by choosing the appropriate interface cable: 17196 for *reverse* or 17533 for *normal*. If you have only one interface cable, the polarity setting of the G.O. 1015 can be changed to correspond with your cable. Application Note 35 gives detailed instructions.
- **G.O. 1016 Rosette** - Connect the CTD's 6-pin top center JT7 connector to the Rosette.

WARNING!
Some oceanographic vessels isolate (un-ground) the AC power ground circuit. If the Deck Unit is being installed on a vessel with an isolated AC power ground, a secure separate ground connection must be made between the Deck Unit chassis and the ship's hull for SAFETY REASONS.

Power to Deck Unit

Verify that the Deck Unit back panel power selector switch is in the correct position (120 or 240 VAC) for your mains power source. Connect power to the *AC Input* connector on the Deck Unit back panel using the supplied cable.

CAUTION:
Connecting a Deck Unit set for 120 volts to a 240 volt power supply will cause severe damage to the Deck Unit.

Section 4: Installing and Using Sea-Bird Software

This section briefly covers:

- Installing Sea-Bird software
- Using SEATERM terminal program software for instrument setup
- Using SEASAVE real-time data acquisition software
- Using SBE Data Processing post-processing software

See the software manuals and Help files for detailed information.

Installing Software

Sea-Bird recommends the following minimum system requirements for SEASOFT-Win32: Windows 2000 or later, 500 MHz processor, 256 MB RAM, and 90 MB free disk space for installation.

If not already installed, install Sea-Bird software programs on your computer using the supplied software CD.

Install as follows:

1. With the CD in your CD drive, double click on **Seasoft-Win32.exe**.
2. Follow the dialog box directions to install the software.

Install all the components, or just install SEATERM (terminal program), SEASAVE V7 (real-time data acquisition), and SBE Data Processing (data processing). The default location for the software is c:\Program Files\Sea-Bird. Within that folder is a sub-directory for each program.

Notes:
- Help files provide detailed information on SEATERM, SEASAVE V7, and SBE Data Processing.
- NMEATest, a NMEA navigation device simulation program, is part of the SBE Data Processing installation.
- Separate software manuals on CD-ROM contain detailed information on the setup and use of the software.
- Sea-Bird also supplies an older version of SEASAVE, SEASAVE-Win32. However, all SEASAVE instructions in this manual are written for SEASAVE V7. See SEASAVE-Win32's manual and/or Help files if you prefer to use the older software.

Using SEATERM

Notes:
- See SEATERM's Help files for detailed information.
- The *IEE-488* interface does not work with SEATERM. You must use the RS-232 interface for setting up the instrument in SEATERM.

1. Connect the desired Deck Unit connector (*SBE 11 Interface RS-232*, *Remote Out*, *9600 Baud Uplink*, or *Modem*) to the computer using the supplied cable.

2. Double click on SeaTerm.exe. If this is the first time the program is used, the setup dialog box may appear:

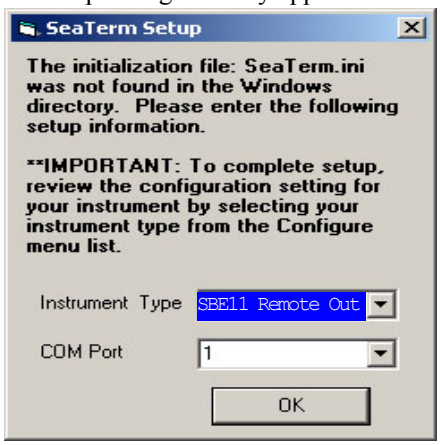

Select the instrument type (for example, SBE 11 Remote Out if connected to the *Remote Out* connector) and the computer COM port for communication with the instrument. Click OK.

3. The main screen looks like this:

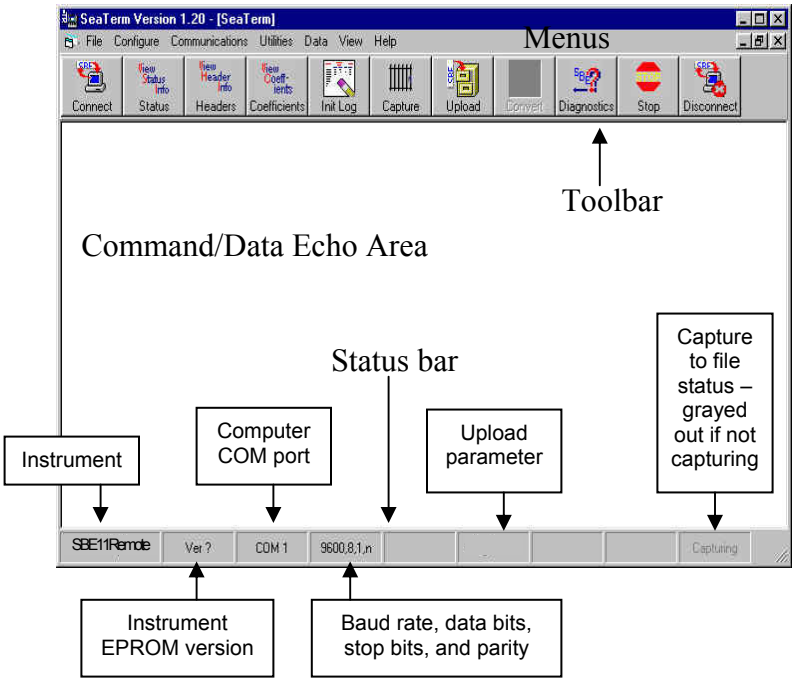

- Menus – For tasks and frequently executed instrument commands.
- Toolbar –Buttons for frequently executed tasks and instrument commands. All tasks and commands accessed here are also available in the Menus. To display or hide the Toolbar, select View Toolbar in the View menu. Grayed out buttons are not applicable.
- Command/Data Echo Area – Echoes (if applicable) a command executed using a Menu or Toolbar button, as well as the instrument's response. Additionally, a command can be manually typed in this area, from the available commands for the instrument.
- Status bar – Provides status information. To display or hide the Status bar, select View Status bar in the View menu.

Following are the Toolbar buttons applicable to the Deck Unit (varies, depending on which interface is connected):

Toolbar Buttons	Description	Equivalent Command
Connect	Re-establish communications with instrument. Computer responds with S> prompt.	(press Enter key)
Capture	Capture instrument responses on screen to file; useful for diagnostics. File has .cap extension. Press Capture again to turn off capture. Capture status displays in Status bar.	—
Disconnect	Free computer COM port used to communicate with instrument. COM port can then be used by another program.	—

4. In the Configure menu, select the interface corresponding to the connection between the computer and the Deck Unit:
   - SBE 11 Interface - connection to *SBE 11 Interface RS-232* used for general Deck Unit setup; see *Section 5: Setting Up System* for details
   - SBE 11 Modem
   - SBE 11 Remote Out - used to set up Converted Data Output (CDO); see *Section 8: Setting Up Remote Output* for details
   - SBE 11 9600 Baud Uplink

   The Configuration dialog box appears (example shown for SBE 11 Remote Out).

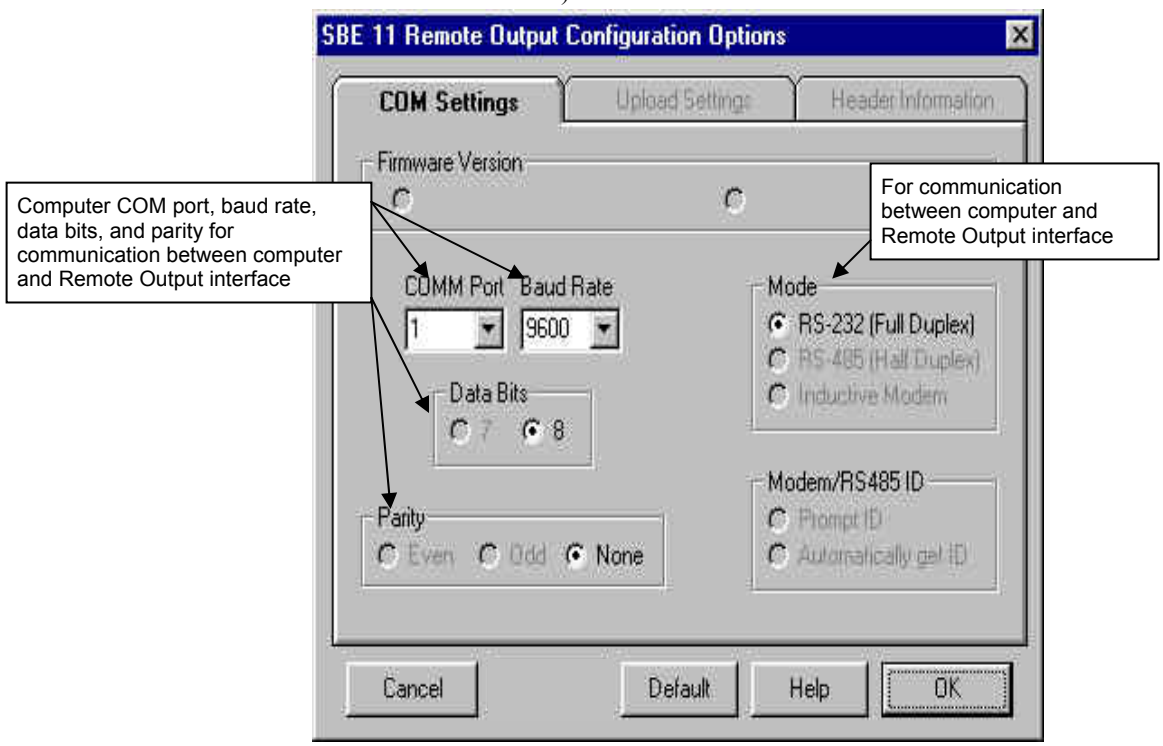

   Make the selections in the Configuration Options dialog box to correspond to the information on the Deck Unit Configuration Sheet. Click OK to save the settings.

5. Turn on power to the Deck Unit. Send commands as desired. See *Section 5: Setting Up System*, *Section 8: Setting Up Remote Output*, *Section 9: Setting Up Water Sampler*, and *Section 10: Setting Up RS-232 Serial Data Uplink* for details.

Using SEASAVE

Notes:
- See SEASAVE V7's help files for detailed information.
- Older SEASAVE versions (<6.0) saved CTD data coming from the Deck Unit as a .dat file instead of a .hex file.

SEASAVE provides real-time data acquisition and display of data, as well as control of bottle firing for a system with a water sampler. When used with the SBE 11*plus* V2 Deck Unit, SEASAVE can save the real-time data to a .hex file on the computer.

1. Double click on Seasave.exe. SEASAVE's main window looks like this:

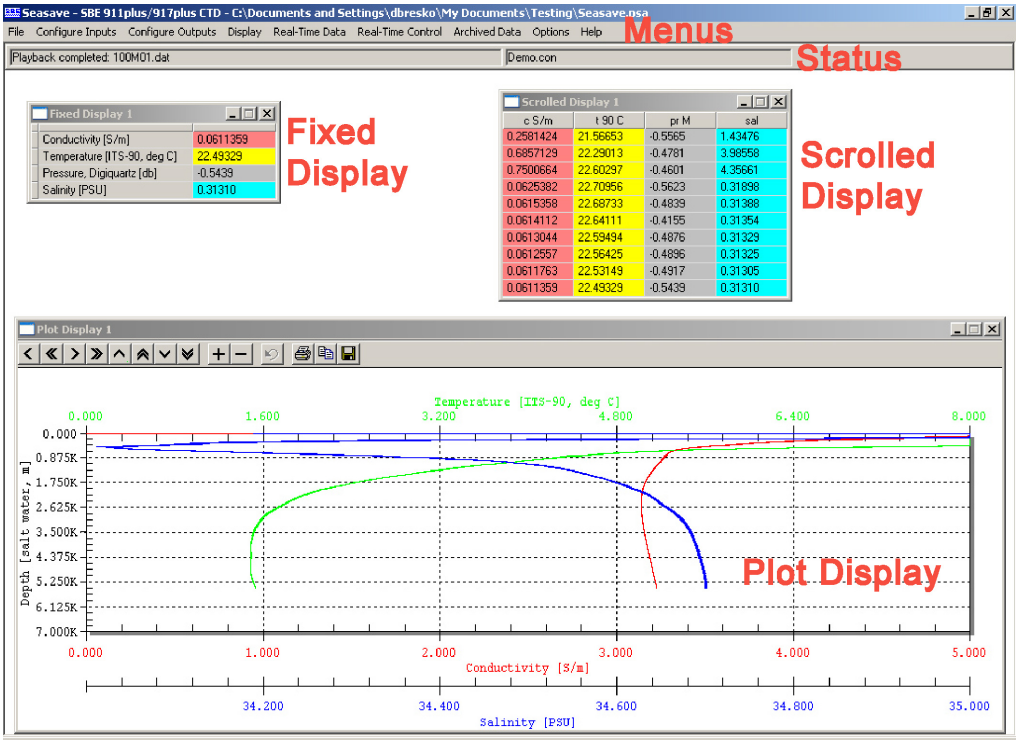

- Title bar – The title bar shows the selected instrument type and the path and file name for the program setup (.psa) file. The .psa file contains all the instrument setup information as well as size, placement, and setup for each display window.
- Menus - The Menus contain options for setting up the instrument and the displays, as well as for starting data acquisition.
- Status display - This display provides the following information:
  - If SEASAVE is acquiring real-time data or reading archived data
  - If SEASAVE is storing real-time data to a file; output data file name
  - Instrument configuration (.con) file name

  To display or hide the Status, select Status in the Display menu.
- Data display windows – SEASAVE can display as many data windows as desired (within the limits of your computer's resources). The windows can be set up to display real-time data (conductivity, temperature, pressure, etc.) as well as calculated parameters such as salinity and sound velocity. There are three windows types:
  - **Fixed** Display has a vertical list of selected parameters to the left, and displays their current values to the right.
  - **Scrolled** Display has a list of selected parameters across the top, and displays the data in scrolling vertical columns.
  - **Plot** Display plots 1 parameter on the y-axis and up to 4 on the x-axis, or 1 parameter on the x-axis and up to 4 on the y-axis.

2. Add displays as desired by selecting *Add New . . . Display Window* in the Display menu.

3. In Configure Inputs, set up the following:
   - Instrument Configuration – instrument configuration (.con) file, which defines what sensors are integrated with the CTD and what channels are used by the sensors, sensor calibration coefficients, and what other data is integrated with the data stream from the 9*plus*
   - Serial Ports – define communication parameters for *SBE 11 Interface* channel (sends commands to and receives replies from 9*plus*); COM port for *Modem Channel* (sends commands to and receives replies from the water sampler, and sends pump on/off commands to 9*plus* with custom pump control); and COM ports for serial data output and SBE 14 Remote Display
   - Water Sampler – enable and set up control of bottle firing for a water sampler
   - TCP/IP Ports – define ports for communication with SEASAVE and for publishing data to remote clients
   - Miscellaneous – define parameters required for output of depth, average sound velocity, descent rate, acceleration, oxygen, plume anomaly, and/or potential temperature anomaly
   - Pump Control – enable user pump control for a custom 9*plus*

4. In Configure Outputs, set up the following:
   - Serial Data Out – enable and set up output of selected raw data (frequencies and/or voltages) and/or converted data (engineering units) to a COM port on your computer
   - Serial Ports – define communication parameters for *SBE 11 Interface* channel (sends commands to and receives replies from the 9*plus*); COM port for *Modem Channel* (sends commands to and receives replies from the water sampler, and sends pump on/off commands to 9*plus* with custom pump control); and COM ports for serial data output and SBE 14 Remote display
   - Shared File Out – enable and set up output of selected raw data (frequencies and/or voltages) and/or converted data (engineering units) to a shared file on your computer
   - Mark Variables - define variables to be written to a file each time the user *marks a scan* in SEASAVE during data acquisition
   - TCP/IP Out – enable and set up output of raw and/or converted (engineering units) data to TCP/IP ports
   - TCP/IP Ports – define ports for communication with SEASAVE and for publishing data to remote clients
   - SBE 11plus Alarms – enable and set up Deck Unit's pressure and/or altimeter alarm
   - SBE 14 Remote Display – enable and set up data output to an SBE 14 Remote Display, and set up SBE 14 pressure, altimeter, and/or bottom contact switch alarms, for an SBE 14 **connected to a computer COM port**
   - PC Alarms – enable and set up pressure, altimeter, and/or bottom contact switch alarms in the computer running SEASAVE
   - Header Form – create a customized header written to the data file
   - Diagnostics – enable and set up diagnostic outputs, to assist in troubleshooting if you encounter difficulty running the software

Notes:
- The Deck Unit's alarm does not require any setup for a bottom contact switch integrated with the 9*plus*.
- SBE 14 Remote Display **does not apply** to an SBE 14 connected directly to the Deck Unit's Remote Out connector, which is the typical usage. See *Section 8: Setting Up Remote Output* for setup for the typical usage.

5. When ready to begin data acquisition, select Start in the Real-Time Data menu. See *Section 11: Operating System* for details.

Using SBE Data Processing

SBE Data Processing provides post-processing modules for the real-time data acquired in SEASAVE. The modules include:

Note:
Older SEASAVE versions (<6.0) saved CTD data coming from the Deck Unit as a .dat file instead of a .hex file.

Module	Description
Data Conversion Modules	
Data Conversion	Convert raw .hex data from SBE 11*plus* V2 Deck Unit to engineering units, and store converted data in a .cnv file.
Bottle Summary	Summarize data from water sampler bottle .ros file, storing results in .btl file.
Mark Scan	Create .bsr bottle scan range file from .mrk data file.
Data Processing Modules	
Align CTD	Align data (typically conductivity, temperature, and oxygen) relative to pressure.
Bin Average	Average data into bins based on pressure, depth, scan number, or time range.
Buoyancy	Compute Brunt Väisälä buoyancy and stability frequency.
Cell Thermal Mass	Perform conductivity thermal mass correction.
Derive	Calculate derived variables, such as salinity, density, sound velocity, oxygen, potential temperature, dynamic height, etc.
Loop Edit	Mark a scan with *badflag* if scan fails pressure reversal or minimum velocity tests.
Wild Edit	Mark a data value with *badflag* to eliminate wild points.
Window Filter	Filter data with triangle, cosine, boxcar, gaussian, or median window.
File Manipulation Modules	
ASCII In	Add header information to a .asc file containing rows and columns of ASCII data.
ASCII Out	Output data portion and/or header portion from .cnv file to an ASCII file; useful for exporting converted data for processing by other (non-Sea-Bird) software.
Section	Extract rows of data from .cnv file.
Split	Split data in .cnv file into upcast and downcast files.
Strip	Extract columns of data from .cnv file.
Translate	Convert data format in .cnv file from ASCII to binary, or vice versa.
Data Plotting Modules	
Sea Plot	Plot data at any point after Data Conversion has been run.
Miscellaneous	
SeacalcW	Calculate derived variables from one user-input scan of temperature, pressure, etc.

To get started using SBE Data Processing:

Note:
See SBE Data Processing's Help files for detailed information.

1. Double click on SBEDataProc.exe. SBE Data Processing's main window looks like this:

The window's menus are described below:

- Run -
  - List of the post-processing modules: Select the desired module to set up the module parameters and process data.
  - Run Options: Select Run Options to assist in automating processing.
  - Exit: Select to exit the program.

Note:
The .con file used in SBE Data Processing is the same as the file that is used during real-time data acquisition in SEASAVE. For user convenience, both SEASAVE and SBE Data Processing allow you to create/modify a .con file.

- Configure - contains a list of Sea-Bird instruments that require a configuration (.con) file. Select the desired instrument (911/917plus CTD) to modify or create a .con file for that instrument. The .con file defines the number and type of sensors interfacing with the instrument, as well as the sensor calibration coefficients.

Section 5: Setting Up System

This section covers:
- Setting up general operating parameters for the Deck Unit in SEATERM
- Setting up the CTD configuration (.con) file in SEASAVE

See the following for details on setting up:
- NMEA Interface - *Section 6: Setting Up NMEA Interface*
- Surface PAR - *Section 7: Setting Up Surface PAR*
- Remote Output - *Section 8: Setting Up Remote Output*
- Water Sampler - *Section 9: Setting Up Water Sampler*
- RS-232 Serial Data Uplink - *Section 10: Setting Up RS-232 Serial Data Uplink*

Setting Operating Parameters in SEATERM

1. Connect the Deck Unit's *SBE 11 Interface RS-232* connector to the computer.

2. Double click on SeaTerm.exe.

3. In the Configure menu, select the **SBE 11 Interface**. The Configuration Options dialog box appears. Set:
   - Firmware Version - Version 5.0 or greater
   - Comm Port - for connection of SBE 11 Interface to computer
   - Baud Rate - 19200
   - Data Bits - 8
   - Parity - none
   - Mode - RS-232

   Click *OK* to save the settings and exit the dialog box.

4. Turn on power to the Deck Unit, or if already on send the status (**DS**) command. The display in SEATERM looks like this:
   ```
   SBE 11plus V 5.2
   number of scans to average = 8
   pressure baud rate = 9600
   NMEA baud rate = 4800
   surface PAR voltage added to scan
   A/D offset = 0
   GPIB address = 1
   advance primary conductivity  0.073 seconds
   advance secondary conductivity  0.073 seconds
   autorun on power up is disabled
   ```
   See *Commands Entered with SEATERM* below for a description of each output line from the status command.
   If the system does not respond as described:
   - Verify the correct instrument interface (SBE 11 Interface) was selected in the Configure menu and the settings were entered correctly in the Configuration Options dialog box.
   - Check cabling between the computer and Deck Unit.

5. Send commands to modify the system setup as desired. See *Commands Entered with SEATERM* below.

Commands Entered with SEATERM

Notes:
- S> prompt indicates Deck Unit is connected to computer and ready for a command.
- Commands can be entered in upper or lower case.
- When the computer is connected to the *SBE 11 Interface*, SEATERM does not echo commands as you type them. Verify that a command was interpreted correctly by sending **DS** to check appropriate parameter(s).

Note:
Response to status command appears automatically when Deck Unit is powered up, except if **AutoRun=Y**.

The following status and setup commands are transmitted by the user to the Deck Unit's ***SBE 11 Interface*** using SEATERM.

Status Command

DS

Display Deck Unit setup and status parameters. List below includes, where applicable, command used to modify parameter:
- Digital PCB firmware version
- Number of scans to average in Deck Unit - Deck Unit averages and saves to disk at this rate. For full rate data (24 Hz), set to 1
- Pressure baud rate for communication through *Remote Out* connector (**PBaud=**)
- NMEA baud rate for communication through *NMEA* connector (**NMEABaud=**)
- Surface PAR voltage added to scan; appears only if Surface PAR enabled (**AddSPAR=**)
- A/D offset for Surface PAR to adjust for drift in electronics (**Offset=**); appears only if Surface PAR enabled
- GPIB address for IEEE-488 communication with computer (**GPIB=**); must be 1 for use with SEASAVE
- Advances for any conductivity (**AdvanceCn=**) and voltage (**AdvanceVn=**) channels; each channel appears only if its advance is not zero
- Start sampling automatically when power applied (**AutoRun=**)?
- Add NMEA to CTD data status (**AddNMEA=**); appears after autorun status only if autorun is enabled

Example: (command used to modify parameter shown in parentheses)

```
SBE 11plus V 5.2
number of scans to average = 8
pressure baud rate = 9600                                  [PBaud=]
NMEA baud rate = 4800                                      [NMEABaud=]
surface PAR voltage added to scan                          [AddSPAR=]
A/D offset = 0                                             [Offset=]
GPIB address = 1                                           [GPIB=]
advance primary conductivity  0.073 seconds                [AdvanceC0=]
advance secondary conductivity  0.073 seconds              [AdvanceC1=]
autorun on power up is disabled                            [AutoRun=]
```

IEEE-488 Command

GPIB=x

x= IEEE-488 address. Factory default setting is 1. Must be set to 1 for Deck Unit to work with SEASAVE.

Conductivity and Voltage Channel Advance Commands

These commands align parameter data in time, relative to pressure. This ensures that calculations of salinity, dissolved oxygen concentration, and other parameters are made using measurements from the same parcel of water. Channel Advance commands allow alignment to be performed in the Deck Unit, so the real-time data output to SEASAVE is already aligned. If you save full rate (24 Hz) data and the data analysis indicates that additional alignment changes are required, use the Align CTD module in SBE Data Processing to correct any residual misalignment in the saved data.

Note:
CTD systems with atypical flow paths (for example, supporting flow-through fluorometers) may require different settings. See the discussion of Align CTD in the SBE Data Processing manual and Application Note 38 for calculation of optimal advance values.

AdvanceCn=x

n= conductivity channel number (0 or 1).
x= time (seconds) to advance conductivity channel.

Conductivity measurement on a water parcel is delayed because the TC duct presents water to the conductivity sensor after the water has passed the temperature sensor. Since the pump sets a constant flow speed, the delay is constant. To compensate for the delay so salinity can be computed with minimum spiking, the Deck Unit can advance the conductivity measurement in time to coordinate it with the appropriate temperature measurement. This advance occurs *before* any averaging, so a bias error is not introduced in the calculated salinity. **Typical advance for 9*plus* (and factory default) is 0.073 seconds (= 1.75 scans * 1/24).**
See Configuration Sheet for setting for your unit.

Example: Set advance for both conductivity channels (primary and secondary) to 0.073 seconds.
ADVANCEC0=0.073
ADVANCEC1=0.073

AdvanceVn=x

n= A/D channel number (0 - 7).
x= time (seconds) to advance A/D channel (maximum 10 seconds).

Advance A/D channels for auxiliary sensors as needed; see manufacturers' specifications for information on time constants.

SBE 43 Oxygen data is often systematically delayed with respect to pressure. The two primary causes are the long time constant of the oxygen sensor (ranging from 2 seconds at 25 ºC to approximately 5 seconds at 0 ºC) and an additional delay from the transit time of water in the pumped plumbing line. As with conductivity, you can compensate for this delay by shifting oxygen data relative to pressure. **Typical advance for SBE 43 used with SBE 9*plus* is 2 to 5 seconds.**

Example: Set advance for A/D voltage channel 0 to 2 seconds, and for A/D voltage channel 4 to 0.04 seconds.
ADVANCEV0=2.0
ADVANCEV4=0.04

Note:
See *Section 6: Setting Up NMEA Interface*.

NMEA Baud Rate Command

NMEABaud=x

x= baud rate for communication between Deck Unit and NMEA navigation device (4800 or 9600).

Notes:
- **AddSPAR=** must be consistent with setting in configuration (.con) file.
- See *Section 7: Setting Up Surface PAR*.

Surface PAR Commands

AddSPAR=x — **x= Y**: Add Surface PAR voltage to CTD data stream.
x= N: Do not.

Offset=x — **x=** offset voltage *count* (0-99) used to adjust Surface PAR data for drift in Deck Unit electronics.

Note:
See *Section 8: Setting Up Remote Output*.

Pressure Baud Rate Command

PBaud=x — **x=** baud rate for pressure frequency and pressure temperature output from Deck Unit (1200, 2400, 4800, 9600, or 19200).

Autorun Commands

Autorun allows the user to automatically start sampling when power is applied. This may be useful for a system that is not using SEASAVE to control and monitor data acquisition.

AutoRun=x — **x=Y**: When power is applied, automatically send **GR** to start sampling and put data into RS-232C buffer. Do not send and display response of status command on power up.
x=N: Wait for a command when power is applied. Default.

AddNMEA=x — **x=Y**: Add 7 bytes of Lat/Lon data to CTD data.
x=N: Do not add Lat/Lon data to CTD data.

Note:
AddNMEA= is applicable only if **AutoRun=Y**. If **AutoRun=N**, SEASAVE automatically sends **NY** or **NN** to enable or disable NMEA data, based on the setting in the configuration (.con) file.

Setting Up CTD Configuration (.con) File in SEASAVE

Note:
When Sea-Bird ships a new CTD, we include a .con file that reflects the current CTD configuration *as we know it*. The .con file is named with the CTD serial number, followed with the .con extension. For example, for a CTD with serial number 2375, Sea-Bird names the .con file *2375.con*. You may rename the .con file if desired; this will not affect the results.

SEASAVE, Sea-Bird's real-time data acquisition and display program, requires a .con file, which defines the CTD - auxiliary sensors integrated with the instrument, and channels, serial numbers, and calibration dates and coefficients for all the integrated sensors (conductivity, temperature, and pressure as well as auxiliary sensors). SEASAVE (as well as our data processing software) uses the information in the .con file to interpret and process the raw data. **If the .con file does not match the actual instrument configuration, the software will not be able to interpret and process the data correctly.** To verify the contents of the .con file:

1. Double click on Seasave.exe.

2. Click Configure Inputs. On the Instrument Configuration tab, click *Open*. In the dialog box, select the .con file and click Open.

3. The configuration information appears on the Instrument Configuration tab. Verify the .con file matches your system. Click Modify to bring up a dialog box (shown below) to change the configuration and/or to view/modify calibration coefficients.

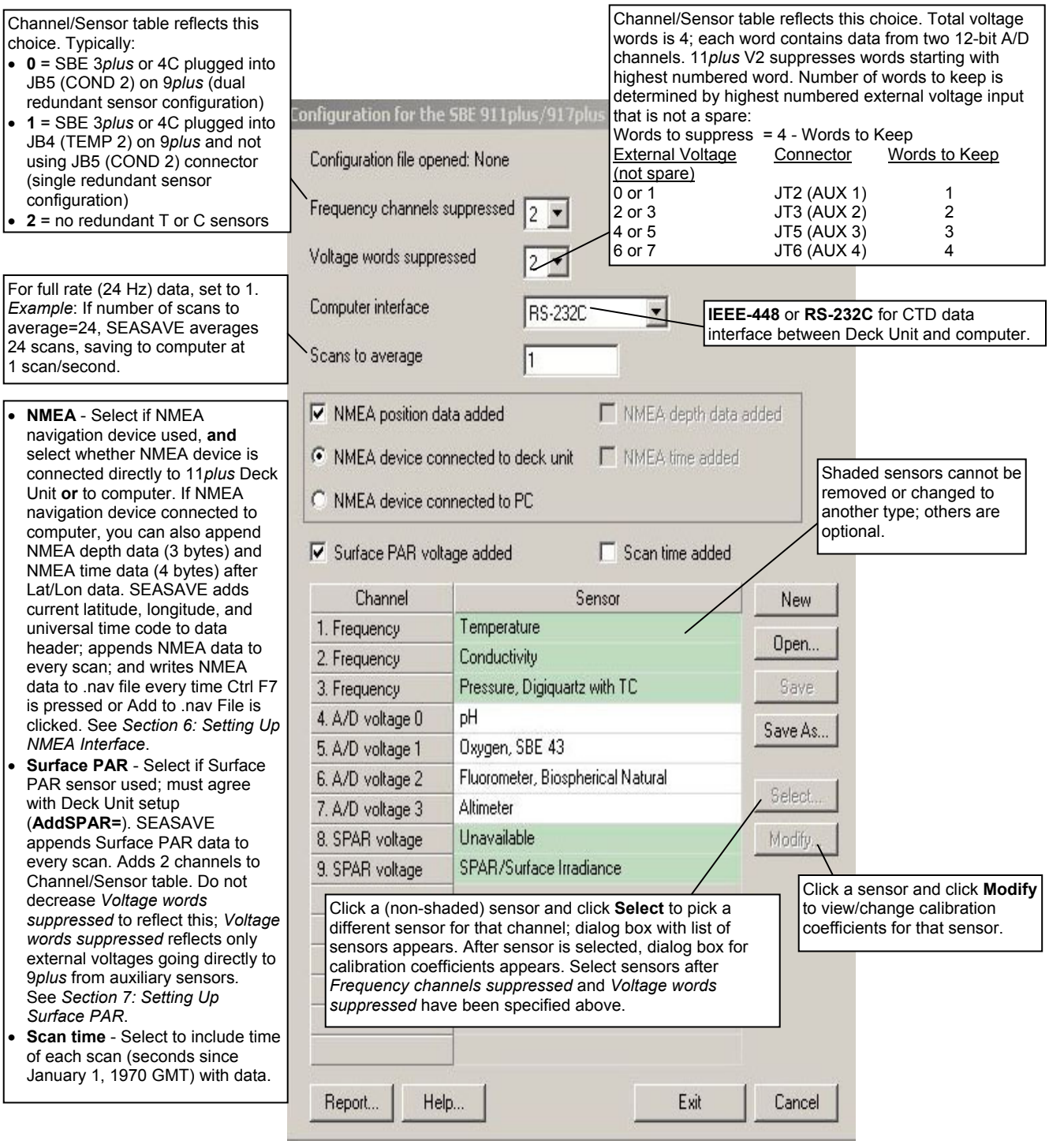

4. Click *Save* or *Save As* to save any changes to the .con file. Click Exit when done reviewing / modifying the .con file.

Section 6: Setting Up NMEA Interface

Notes:
- To save the NMEA data with the CTD data, select *NMEA position data* added when setting up the CTD configuration (.con) file in SEASAVE.
- A NMEA navigation device can be connected directly to the computer instead of to the Deck Unit. This feature is supported by SEASAVE V7 version 7.17 and later; see *Setting Up CTD Configuration (.con) File in SEASAVE* in *Section 5: Setting Up System*. The output from SEASAVE is the same, regardless of whether the NMEA data was appended in the Deck Unit or in the computer. See *NMEA Navigation Device Message and Data Formats* in this section for the required NMEA data format.

The Deck Unit includes a NMEA 0183 Interface that permits position data to be merged with the CTD data. The NMEA Interface is designed to decode messages that are output from navigation devices supporting NMEA 0183 protocol. The Deck Unit **automatically** decodes GGA, GLL, RMA, RMC, and TRF NMEA messages.

The decoded Latitude and Longitude is appended to the CTD data stream in the Deck Unit and passed to the computer for storage and/or display with the CTD data. The *NMEA* LED on the Deck Unit front panel flashes each time a NMEA message is successfully decoded (should flash at the same rate at which the navigation device is transmitting). The Deck Unit appends the same NMEA message multiple times, until a new message is decoded:

- If the Deck Unit is communicating with the computer via **IEEE-488**, the navigation data is **appended to each CTD scan** sent from the Deck Unit to the computer.

- If the Deck Unit is communicating with the computer via **RS-232**, the navigation data is **transmitted by the Deck Unit to the computer only once per second**. In SEASAVE, the navigation data is then appended to each CTD scan, so the output from SEASAVE is the same, regardless of whether IEE-488 or RS-232 communication was used.

Example: The CTD is sampling at 24 Hz, and not averaging the data. A navigation device outputs its NMEA message once every 5 seconds. The *NMEA* LED flashes every 5 seconds.
- If communicating with the computer via IEEE-488, the same message is appended to each scan of CTD data within that 5 seconds (that is, 24 scans/second x 5 seconds = 120 scans show the same NMEA data).
- If communicating with the computer via RS-232, the same message is transmitted only 5 times (for example, NMEA data is transmitted only after CTD scans 1, 25, 49, 73, and 97). In SEASAVE, the same message is then appended to each scan of CTD data within that 5 seconds.

Note that this section covers setting up and troubleshooting NMEA that is acquired through the Deck Unit; it is not applicable to the acquisition of data from a NMEA device connected directly to the computer.

NMEA Interface Commands

Commands Sent by User with SEATERM

Notes:
- S> prompt indicates Deck Unit is connected to computer and ready for a command.
- Commands can be entered in upper or lower case.
- When the computer is connected to the *SBE 11 Interface*, SEATERM does not echo commands as you type them. Verify that a command was interpreted correctly by sending status (**DS**) command to check appropriate parameter(s).

The following commands are **transmitted by the user** to the Deck Unit's ***SBE 11 Interface*** using SEATERM.

Baud Rate Command

NMEABaud=x — **x=** baud rate for communication between Deck Unit and NMEA navigation device (4800 or 9600).

Diagnostic Commands

These commands can be used for diagnostic purposes in SEATERM to display navigation data, to verify that the NMEA navigation device and the interface in the Deck Unit are functioning properly. Hex latitude/longitude data from the NMEA navigation device is converted to ASCII text. Format is:
LAT 47 37.51 N
LON 122 09.41 W
If NMEA message RMC is decoded, date and time display on next line with this format:
DDMMYY HHMMSS

NSR — Output Lat/Lon ASCII data over the ***RS-232*** *SBE 11 Interface* to computer. One scan of NMEA data appears in SEATERM.

NSI — Output Lat/Lon ASCII data over the ***IEEE-488*** *SBE 11 Interface* to computer. One scan of NMEA data appears in SEATERM.

Commands Sent Automatically by SEASAVE

Notes:
- If *NMEA position data added* is selected in the CTD configuration file, but the Deck Unit is not connected to a NMEA navigation device, SEASAVE will give you an error message when you try to start data acquisition.
- If *NMEA position data added* is selected in the CTD configuration file, SEASAVE also automatically sends **NSR** or **NSI** at the beginning of the cast, and places the NMEA data in the output file header.

The following command (**NY** or **NN**) is sent automatically by SEASAVE to configure the Deck Unit, based on the setting for *NMEA position data added* in the CTD configuration (.con) file. This setting is not stored in the Deck Unit's EEPROM. The command remains in effect until the Reset button on the Deck Unit front panel is pushed or a new command is sent.

Nx — **x=Y**: Add Lat/Lon data to CTD data.

x=N: Do not add Lat/Lon data to CTD data.

Setting Up NMEA in SEATERM

1. Connect the Deck Unit's *SBE 11 Interface RS-232* connector to the computer.

2. Double click on SeaTerm.exe.

3. In the Configure menu, select the **SBE 11 Interface**. The Configuration Options dialog box appears. Set:
   - Firmware Version - Version 5.0 or greater
   - Comm Port - for connection of SBE 11 Interface to computer
   - Baud Rate - 19200
   - Data Bits - 8
   - Parity - none
   - Mode - RS-232

   Click *OK* to save the settings and exit the dialog box.

4. Turn on power to the Deck Unit, or if already on send the status (**DS**) command. The display in SEATERM looks like this:

```
SBE 11plus V 5.2
number of scans to average = 8
pressure baud rate = 9600
NMEA baud rate = 4800
surface PAR voltage added to scan
A/D offset = 0
GPIB address = 1
advance primary conductivity  0.073 seconds
advance secondary conductivity  0.073 seconds
autorun on power up is disabled
```

5. Check the NMEA baud rate in the status command response. If necessary, send **NMEABaud=** to change the baud for communication between the Deck Unit and NMEA navigation device (4800 or 9600).

6. Turn off the Deck Unit.

Setting Up and Testing NMEA in SEASAVE

Notes:
- The Deck Unit must be connected to the CTD to test the NMEA interface. If it is not connected, noise on the open *Sea Cable* connector will interfere with communication with the Deck Unit.
- See SEASAVE's Help files for detailed information.

Note:
If the selected .con file does not indicate that NMEA position data is to be added:
- Latitude and longitude will not be available as display variables in the fixed, scrolled, or plot display.
- *NMEA Display* will not be available in the Display menu.

1. Connect the Deck Unit's *SBE 11 Interface RS-232* connector to the computer, the *NMEA* connector to the NMEA navigation device, and the *Sea Cable* connector to the CTD.

2. Double click on Seasave.exe.

3. Click Configure Inputs. On the Instrument Configuration tab, select the configuration (.con) file for your instrument. See *Setting Up CTD Configuration (.con) File in SEASAVE* in *Section 5: Setting Up System* for details. **Verify that the .con file indicates that NMEA position data is to be added.**

4. Set up a display window as a fixed display, and select Latitude, Longitude, and Time as display variables for that window. **-OR-**
   In the Display menu, select *NMEA Display*.

5. Start real-time data acquisition - In the Real-Time Data menu, click *Start*; then click Start in the dialog box (see *Section 11: Operating System* for details). You should begin seeing latitude, longitude, and time display in SEASAVE. Each time position data is successfully decoded, the *NMEA* LED on the Deck Unit should flash. If the data is correct and is updating properly, the NMEA Interface is working.
   - If position data does not appear, verify that the Deck Unit is connected to the NMEA navigation device with the proper cable.
   - See *Troubleshooting NMEA Interface* below for additional instructions if needed.

Troubleshooting NMEA Interface

Problem 1: *NMEA* LED Not Flashing, or *NMEA* LED Flashing but Lat/Lon Data Not Displaying

Cause/Solution 1: Wiring may be incorrect. Check cables and connections between the Deck Unit, NMEA navigation device, and computer.

Cause/Solution 2: NMEA navigation device may be set to the wrong baud rate (Deck Unit requires 4800 or 9600 baud). Verify Deck Unit's NMEA Interface baud rate with **DS** in SEATERM. Reset device's baud rate if necessary.

Cause/Solution 3: NMEA navigation device may not be transmitting data. See the device manual for setup details. To verify that it is sending data, connect an oscilloscope with ground on NMEA B (T17) and the probe on NMEA A (T16). The signal should be less than 0.5 volts between messages and have pulses greater than 4 volts for at least 0.2 milliseconds during the message.

Cause/Solution 4: NMEA Interface in the Deck Unit may not be operating properly. To verify, use the GPS simulation program, NMEATest, supplied with SEASOFT-Win32. This program simulates a NMEA navigation device transmitting a NMEA message. See *NMEA Message Simulation Program* below for details.

NMEA Message Simulation Program

Sea-Bird provides a NMEA message simulation program, NMEATest, as a troubleshooting aid. NMEATest, part of the SEASOFT-Win32 package, simulates a NMEA navigation device transmitting messages in RMA, RMC, GLL, or GGA format. If the system does not work with the NMEA navigation device, but works with NMEATest, the problem is with the interface cable from the NMEA navigation device to the Deck Unit or in the NMEA navigation device itself.

NMEATest is just a simulation, and does not provide an actual data stream from an actual NMEA navigation device. The data transmission baud rate (4800 or 9600) and time between messages are user-programmable. The NMEA message format (RMA, RMC, GLL, or GGA) generated by the program is also user-programmable. Alternatively, the user can specify an existing raw NMEA data file to use for the simulation; see *NMEA Navigation Device Message and Data Formats* below for the required raw data format.

Note:
You can also run the simulation using only one computer, if the computer has a spare COM port.

To execute the simulation program, a **second computer** (computer 2) is needed to emulate the NMEA navigation device. A laptop computer is adequate for this purpose. Install NMEATest on computer 2 (NMEATest is part of the SBE Data Processing installation).

Note:
The Deck Unit must be connected to the CTD to test the NMEA interface. If it is not connected, noise on the open *Sea Cable* connector will interfere with communication with the CTD.

Use the NMEA Interface test cable to connect the Deck Unit *NMEA* to the simulation computer. The simulation test cable connections are:

MS3102A12S-3P	DB-9S	Function
Pin A	Pin 3	NMEA A (signal)
Pin B	Pin 5	NMEA B (signal return)

Proceed as follows (instructions are written assuming you are using a second computer to emulate the NMEA navigation device):

1. On computer 1, in **SEATERM**, note the NMEA baud rate in the status command response – 4800 or 9600 (see *Setting Up NMEA in SEATERM* above).

2. On computer 2, double click on **nmeatest.exe** (in same directory as SBE Data Processing). The NMEATest screen appears.

3. On the NMEATest screen, click on the Configure menu. The Configure dialog box appears. Select:
   - NMEA message to be simulated (RMA, RMC, GLL, or GGA) **or** select an existing NMEA data file on your computer by clicking *Send File* and browsing to the desired file.
   - Baud rate (4800 or 9600) for transmission of simulated NMEA data to Deck Unit – must match NMEA baud rate set in the Deck Unit (see *Step 1*).
   - COMM port on computer 2 for transmission of NMEA data to Deck Unit.
   - Message interval (time between simulated messages to be transmitted to Deck Unit).

   Click OK.

4. On the NMEATest screen, click Start. NMEA data should begin to display on the NMEATest screen on computer 2. The *NMEA* LED should flash each time the simulation program transmits a new position.

5. On computer 1, set up **SEASAVE** and start data acquisition (Steps 1 through 5 in *Setting Up and Testing NMEA in SEASAVE* above). NMEA data should display in SEASAVE.

The latitude and longitude displayed by SEASAVE should correspond to that of the simulation program (see *NMEA Navigation Device Message and Data Formats* below for the raw and decoded NMEA message formats). If properly decoded data appears on the screen, the NMEA Interface in the Deck Unit is working properly. If the system works with the simulation program but does not work when connected to the actual NMEA navigation device, the problem is with the cable from the NMEA navigation device to the Deck Unit, or in the NMEA navigation device itself.

- Verify that the cable pinouts are correct, especially at the NMEA navigation device. See *Wiring System* in *Section 3: Mounting and Wiring System* and also refer to the NMEA navigation device documentation.

- If the cable is correct, verify that the NMEA navigation device is on and is configured to send data. Many NMEA navigation devices have programmable NMEA outputs and may need to be configured before they will transmit NMEA messages. Again, refer to the NMEA navigation device documentation, or contact the device's manufacturer for customer support.

NMEA Navigation Device Message and Data Formats

Notes:
- -- represents two device-specific characters.
- See the table below for definitions of message parameters.
- <CR> is carriage return
- <LF> is line feed.

Message Formats

GGA - Global Positioning System Fix Data
Time, position, and fix related data for a GPS receiver.
$--GGA,hhmmss.ss,llll.ll,a,yyyyy.yy,b,x,xx,x.x,x.x,M,x.x,M,x.x,xxxx*hh<CR><LF>

GLL - Geographic Position - Latitude/Longitude
Latitude and Longitude of present position, time of position fix, and status.
$--GLL,llll.ll,a,yyyyy.yy,b,hhmmss.ss,A*hh<CR><LF>

RMA - Recommended Minimum Specific Loran-C Data
Position, course, and speed data provided by a LORAN-C receiver.
$--RMA,A,llll.ll,a,yyyyy.yy,b,x.x,x.x,x.x,x.x,x.x,a*hh<CR><LF>

RMC - Recommended Minimum Specific GPS/TRANSIT Data
Time, date, position, course, and speed data provided by a GPS or TRANSIT navigation receiver.
$--RMC,hhmmss.ss,A,llll.ll,a,yyyyy.yy,b,x.x,x.x,ddmmyy,x.x,a*hh<CR><LF>

TRF - TRANSIT Fix Data
Time, date, position, and information related to a TRANSIT fix.
$--TRF,hhmmss.ss,ddmmyy,llll.ll,a,yyyyy.yy,b,x.x,x.x,x.x,x.x,xxx,A*hh<CR><LF>

Field Type	Symbol	Definition
Status	A	Single character field: A = Yes, data valid, warning flag clear V = No, data invalid, warning flag set
Latitude	llll.ll	Fixed/Variable length field: degrees|minutes.decimal - 2 fixed digits of degrees, 2 fixed digits of minutes, and variable number of digits for decimal-fraction of minutes. Leading zeros always included for degrees and minutes to maintain fixed length. Decimal point and associated decimal-fraction are optional if full resolution not required.
	a	N or S
Longitude	yyyyy.yy	Fixed/Variable length field: degrees|minutes.decimal - 3 fixed digits of degrees, 2 fixed digits of minutes, and variable number of digits for decimal-fraction of minutes. Leading zeros always included for degrees and minutes to maintain fixed length. Decimal point and associated decimal - fraction optional if full resolution not required.
	b	E or W
Time	hhmmss.ss	Fixed/variable length field: hours|minutes|seconds.decimal - 2 fixed digits of hours, 2 fixed digits of seconds, and variable number of digits for decimal-fraction of seconds. Leading zeros always included for hours, minutes, and seconds to maintain fixed length. Decimal point and associated decimal-fraction optional if full resolution not required.
Checksum	*	Optional Checksum Delimiter.
	hh	Optional Checksum Field: Absolute value calculated by exclusive OR'ing 8 data bits (no start or stop bits) of each character in message, between, but excluding *$* and *.

Data Formats

For IEEE-488 interface, 7 bytes of position data are appended to the end of each CTD scan sent from the Deck Unit to the computer.

For RS-232C interface, 14 ASCII characters of position data followed by a carriage return and line feed are transmitted once per second. For example, if sampling at 24 Hz, NMEA data will be transmitted after CTD scans 1, 25, 49, etc., while the intermediate scans will contain only CTD data. Note that in SEASAVE, the navigation data is then appended to each CTD scan, so the output from SEASAVE is the same regardless of whether IEE-488 or RS-232 communication was used.

Our software calculates latitude and longitude as follows:

Latitude (deg) = (byte 1 * 65536 + byte 2 * 256 + byte 3) / 50000

Longitude (deg) = (byte 4 * 65536 + byte 5 * 256 + byte 6) / 50000

Notes:
- If bit 1 in byte 7 is 1, this is a new position.
- If bit 8 in byte 7 is 1, Latitude is negative.
- If bit 7 in byte 7 is 1, Longitude is negative.
- North latitudes are positive, south latitudes are negative.
- East longitudes are positive, west longitudes are negative.

Example:
Appended position data = 2455FC5D32B141
byte 1 = 24 hex = 36 decimal
byte 2 = 55 hex = 85 decimal
byte 3 = FC hex = 252 decimal
byte 4 = 5D hex = 93 decimal
byte 5 = 32 hex = 50 decimal
byte 6 = B1 hex = 177 decimal
byte 7 = 41 hex = 01000001 binary

This is a new position (bit 1 in byte 7 is 1).
Latitude is positive (bit 8 in byte 7 is 0).
Longitude is negative (bit 7 in byte 7 is 1).
Latitude = (36 * 65536 + 85 * 256 + 252) / 50000 = 47.62616 degrees
Longitude = (93 * 65536 + 50 * 256 + 177) / 50000 = -122.1565 degrees

Section 7: Setting Up Surface PAR

An A/D converter for a Surface PAR light sensor is included in the Deck Unit. The Deck Unit can acquire the 0 to 5 volt output of a Biospherical (QSR-240, QCR-240, QSR-2200, or QCR-2200) Surface PAR sensor, append it to the CTD data stream in the Deck Unit, and pass it to the computer for storage and/or display with the CTD data. All versions of SEASOFT-Win32 fully support the acquisition and display of data from a Biospherical Surface PAR sensor.

Surface PAR Commands

Notes:
- `S>` prompt indicates Deck Unit is connected to computer and ready for a command.
- Commands can be entered in upper or lower case.
- When the computer is connected to the *SBE 11 Interface*, SEATERM does not echo commands as you type them. Verify that a command was interpreted correctly by sending status (**DS**) command to check appropriate parameter(s).
- **AddSPAR=** must be consistent with the setting in the configuration (.con) file.

The following commands are **transmitted by the user** to the Deck Unit's ***SBE 11 Interface*** using SEATERM.

Setup Commands

AddSPAR=x	**x= Y**: Add Surface PAR voltage to the CTD data stream. **x= N**: Do not add Surface PAR voltage to the CTD data stream.
Offset=x	**x=** offset voltage *count* (0-99) used to adjust Surface PAR data for drift in the Deck Unit electronics (see below for procedure).

Setting Up Surface PAR and Adjusting for Drift in SEATERM

Use the following procedure to enable acquisition of Surface PAR data and adjust the Surface PAR data to account for drift in the Deck Unit electronics:

1. Connect the Deck Unit's *SBE 11 Interface RS-232* connector to the computer. **Disconnect** the Surface PAR sensor from the Deck Unit.

2. Double click on SeaTerm.exe.

3. In the Configure menu, select the **SBE 11 Interface**. The Configuration Options dialog box appears. Set:
   - Firmware Version - Version 5.0 or greater
   - Comm Port - for connection of SBE 11 Interface to computer
   - Baud Rate - 19200
   - Data Bits - 8
   - Parity - none
   - Mode - RS-232

   Click *OK* to save the settings and exit the dialog box.

4. Turn on power to the Deck Unit, or if already on send the status (**DS**) command. The display in SEATERM looks like this:

```
SBE 11plus V 5.2
number of scans to average = 8
pressure baud rate = 9600
NMEA baud rate = 4800
surface PAR voltage added to scan
A/D offset = 0
GPIB address = 1
advance primary conductivity  0.073 seconds
advance secondary conductivity  0.073 seconds
auto run on power up is disabled
```

   Looking at the lines related to Surface PAR, which appear only if Surface PAR has been enabled:
   - `Surface PAR voltage added to scan` - Surface PAR is enabled
   - `A/D offset` - offset for Surface PAR to adjust for drift in electronics

5. In SEATERM, send **AddSPAR=Y** (if not already enabled) and **Offset=0**.

6. Set the Deck Unit thumbwheel switch to 9.

7. The number displayed on the Deck Unit's Word Display LED is the value to use for the offset. In SEATERM, send **Offset=x**, where **x** is the number displayed.

8. On the Deck Unit, verify that the LED shows 0. If not, repeat Step 7.

9. Turn off the Deck Unit.

Setting Up CTD Configuration (.con) File in SEASAVE

The Deck Unit integrates the position data from the Surface PAR sensor into the CTD data stream. SEASAVE, Sea-Bird's real-time data acquisition and display program, stores and optionally displays the Surface PAR data along with the CTD data. SEASAVE requires a .con file, which defines the CTD. **The .con file must indicate if Surface PAR data is being added to the CTD data by the Deck unit.** See *Setting Up CTD Configuration (.con) File in SEASAVE* in *Section 5: Setting Up System* for details on viewing and modifying the .con file in SEASAVE.

Surface PAR Data Format

Surface PAR data is stored as a 12-bit binary number, with a decimal value of 0 to 4095 (corresponding to 0 to 5 volts respectively). See *Section 12: Data Formats* for the location of the Surface PAR data in the CTD data stream.

Section 8: Setting Up Remote Output

The Deck Unit provides two remote outputs from the *Remote Out* connector on the Deck Unit back panel:

- Pressure frequency and pressure temperature
- Converted Data Output (CDO)

Pressure Frequency and Pressure Temperature

Notes:
- S> prompt indicates Deck Unit is connected to computer and ready for a command.
- Commands can be entered in upper or lower case.
- When the computer is connected to the *SBE 11 Interface*, SEATERM does not echo commands as you type them. Verify that a command was interpreted correctly by sending status (**DS**) command to check appropriate parameter(s).

Note:
Averaging for data output from the *SBE 11 Interface* and averaging of CDO data has no effect on pressure frequency and pressure temperature output rate.

Pressure frequency and pressure temperature, output at the full CTD data rate of 24 Hz (24 scans/second), can be used to control a towed vehicle.

Pressure Frequency and Pressure Temperature Commands

The following command is **transmitted by the user** to the Deck Unit's **SBE 11 Interface** using SEATERM.

PBaud=x — **x**= baud rate for pressure frequency and pressure temperature output from Deck Unit (1200, 2400, 4800, 9600, or 19200).

To send this command, follow the procedure in *Setting Operating Parameters in SEATERM* in *Section 5: Setting Up System*.

Pressure Frequency and Pressure Temperature Data Format

Pressure frequency and pressure temperature are output in ASCII Hex at the full CTD data rate of 24 Hz. Five bytes are sent ASCII-encoded, with each byte sent as two ASCII characters. A carriage return and line feed terminate each scan.

The first six characters represent 3 bytes of pressure frequency:

Pressure frequency = byte[0] * 256 + byte[1] + (byte[2] / 256)

The last three characters represent the 12-bit pressure temperature compensation number:

Pressure temperature = M * (12-bit temp comp number) + B

Example:
Raw pressure scan = 80E881A81<CR><LF>

byte[0] = 80 HEX = 128 decimal
byte[1] = E8 HEX = 232 decimal
byte[2] = 81 HEX = 129 decimal
Pressure frequency = 128 * 256 + 232 + 129 / 256 = 33000.504 Hz

12-bit temp comp number = A81 HEX = 2689 decimal
If M = 0.01258 and B = -9.844 (from .con file),
Pressure temperature = 0.01258 * 2689 - 9.844 = 23.98 °C

Converted Data Output (CDO)

Notes:
When an SBE 14 is used with the Deck Unit, there are two possible configurations:

- **SBE 14 connected to Deck Unit's *Remote Out* port (typical)**: SBE 14 setup is done by sending commands to Deck Unit's *Remote Out* port using SEATERM. **The SBE 14 Remote Display tab in SEASAVE's Configure Outputs dialog box does not apply**.
- SBE 14 connected to computer COM port: Computer must have additional RS-232 serial port to accommodate SBE 14, and SBE 14 setup is done on the SBE 14 Remote Display tab in SEASAVE's Configure Outputs dialog box. This configuration is not typical, and is not covered in this manual. See SEASAVE's Help files.

Converted data output can be any combination of temperature, conductivity, pressure, depth, salinity, sound velocity, and altimeter height, in engineering units. A limited set of these parameters can be displayed on an SBE 14 Remote Depth Readout or SBE 46 LCD Display Box.

A separate CDO microcontroller in the Deck Unit, with calibration coefficients stored in EEPROM, converts the raw CTD data to the desired parameters. Logic is provided to sound an alarm in the remote device (SBE 14 or 46, or some other device) based on pressure, altimeter height, and/or bottom contact.

CDO data is automatically output when the Deck Unit is powered on or reset. Output is halted when a line containing a carriage return and line feed (in SEATERM, press the Enter key) is received by the CDO microcontroller.

Calibration Coefficients and PROG11V2

The Deck Unit's Remote Output interface requires the instrument calibration coefficients to output data in engineering units (decibars, ºC, etc.). The calibration coefficients are transferred by the user from the instrument configuration (.con) file to the Deck Unit using PROG11V2.exe, which is available on the CD-ROM that shipped with your instrument.
Proceed as follows:

1. Copy PROG11V2.exe from the CD-ROM to your computer.
2. Run PROG11V2.exe.
3. At the prompts, enter the Com port and baud rate for communication between the Remote Output interface and the computer.
4. At the prompt, enter the configuration (.con) file name. **Note that the .con file must be in the same directory as PROG11V2.exe.**
5. PROG11V2 uploads the calibration coefficients from the configuration file to the Deck Unit.

For the list of commands that are automatically executed when PROG11V2 is run, see *Coefficients Commands* in *CDO Commands Entered with SEATERM* below.

Configuring CDO

1. Connect the Deck Unit's *Remote Out* connector to the computer.

2. Double click on SeaTerm.exe.

3. In the Configure menu, select **SBE 11 Remote Out**.
   Make the selections in the Configuration Options dialog box:
   - **COMM Port**: COM 1 through COM 10, as applicable
   - **Baud Rate**: 300, 600, 1200, 2400, 4800, 9600, or 19200 (must be 300 for SBE 14; must be 1200, 2400, 4800, or 9600 for SBE 46)
   - **Data Bits**: 8
   - **Parity**: None
   - **Mode**: RS-232 (Full Duplex)

   Click *OK* to save the settings and exit the dialog box.

4. Turn on power to the Deck Unit, or if already on send the status (**DS**) command. The display in SEATERM looks like this:

```
SBE 11plus Remote Output V 1.0
number of scans to average = 4
bottom contact alarm enabled
pressure alarm enabled:
  pressure to enable alarm = 100.0 db
  sound alarm when pressure is less than 50.00 db
altimeter alarm enabled:
  pressure to enable alarm = 100.0 db
  sound alarm when altimeter height is less than 50.00 meters
  altimeter hysteresis = 5.00 meters
  altimeter volt no. = 2
  altimeter scale factor = 5.00
latitude to use for depth calculation = 30.0
output format = press  depth  temp  cond  sal
```

   (***followed by lines of data if power was just turned on***)

   See *CDO Commands Entered with SEATERM* below for a description of each output line from the status command.

   If the system does not respond as described:
   - Verify the correct instrument interface (SBE 11 Remote Out) was selected in the Configure menu and the settings were entered correctly in the Configuration Options dialog box. Note that the baud rate is documented on the Configuration Sheet.
   - Check cabling between the computer and Deck Unit.

5. To stop the Deck Unit from sending the remote output, hit the Enter key. SEATERM responds with the `S>` prompt, indicating it is ready for a command.

6. Send commands to modify the CDO setup as desired. See *CDO Commands Entered with SEATERM* below.

Notes:
- S> prompt indicates Deck Unit is connected to computer and ready for a command.
- Commands can be entered in upper or lower case.
- Verify that a command was interpreted correctly by sending status (**DS**) command to check appropriate parameter(s).

CDO Commands Entered with SEATERM

The following status and setup commands are transmitted by the user to the Deck Unit's **Remote Output Interface** using SEATERM.

Status Command

DS Display setup parameters.

List below includes, where applicable, command used to modify parameter.

- Firmware version for Remote Output PCB
- Number of scans to average (**NAvg=**) - Deck Unit averages and outputs to remote output port at this rate. This is not same as number of scans to average that appears in status command response for SBE 11 Interface.
- Bottom contact alarm enabled? (**Alarms=**)
- Pressure alarm enabled? (**Alarms=**)
- Pressure to enable alarm (**PEnable=**)
- Pressure alarm setting (**PSet=**)
- Altimeter alarm enabled? (**Alarms=**)
- Pressure to enable alarm (**PEnable=**)
- Altimeter alarm setting (**AltSet=**)
- Altimeter alarm hysteresis (**AltHyst=**)
- Altimeter channel (**AltVolt=**)
- Altimeter scale factor (**AltScale=**)
- Latitude to use for depth calculation (**Lat=**); appears only if output format includes depth
- Output format (**Format=**) - Lists all CDO data output parameters. If output formatted for SBE 14, status command indicates *SBE 14*.

Note:
Status information for each alarm appears only if corresponding alarm is enabled.

Example: Status (DS) command (command used to modify parameter shown in parentheses)

```
S>DS
SBE 11plus Remote Output V 1.0
number of scans to average = 4                                          [NAvg=]
bottom contact alarm enabled                                            [Alarms=]
pressure alarm enabled:                                                 [Alarms=]
   pressure to enable alarm = 100.0 db                                  [PEnable=]
   sound alarm when pressure is less than 50.00 db                      [PSet=]
altimeter alarm enabled:                                                [Alarms=]
   pressure to enable alarm = 100.0 db                                  [PEnable=]
   sound alarm when altimeter height is less than 50.00 meters          [AltSet=]
   altimeter hysteresis = 5.00 meters                                   [AltHyst=]
   altimeter volt no. = 2                                               [AltVolt=]
   altimeter scale factor = 5.00                                        [AltScale=]
latitude to use for depth calculation = 30.0                            [Lat=]
output format = press  depth  alt  temp  cond  sal  sv                  [Format=]
```

Coefficients Commands

DC Display calibration coefficients.

Example: Calibration Coefficients (DC) command

```
S>DC
SBE 11plus Remote Output V 1.0
TEMPERATURE: 24-jun-98s
    TF0 = 1.000000e+03
    TG = 4.345714e-03
    TH = 6.402139e-04
    TI = 2.284978e-05
    TJ = 2.196164e-06
    TOFFSET = 4.500000e+01
CONDUCTIVITY: 25-jun-98s
    CG = -1.045817e+01
    CH = 1.473827e+00
    CI = -4.072657e-03
    CJ = 3.846583e-04
    CPCOR = -9.570000e-08
    CTCOR = 3.250000e-06
    CSLOPE = 1.000000e+00
PRESSURE: 5-May-98
    PC1 = -5.006884e+04
    PC2 = -1.104210e+00
    PC3 = 1.561210e-02
    PD1 = 4.029500e-02
    PT1 = 2.992485e+01
    PT2 = -6.269641e-04
    PT3 = 4.621850e-06
    PT4 = -1.599760e-09
    PSLOPE = 1.000000e+00
    POFFSET = 3.288600e+04
    PM = 1.276324e-02
    PB = -9.680951e+00
altimeter voltage number = 2
altimeter scale factor = 5.0
```

Coefficients are entered in the configuration (.con) file and then uploaded to the Deck Unit with PROG11V2 (described above in *Calibration Coefficients and PROG11V2*). However, to modify only a few coefficients, it may be easier to send one or more of the following commands in SEATERM instead:

Note:
F = floating point number
S = string with no spaces
N = integer

TCalDate=S	**S=** primary temperature calibration date
CCalDate=S	**S=** primary conductivity calibration date
PCalDate=S	**S=** pressure calibration date
TF0=F	**F=** primary temperature F0
TG=F	**F=** primary temperature G
TH=F	**F=** primary temperature H
TI=F	**F=** primary temperature I
TJ=F	**F=** primary temperature J
CG=F	**F=** primary conductivity G
CH=F	**F=** primary conductivity H
CI=F	**F=** primary conductivity I
CJ=F	**F=** primary conductivity J
CPC=F	**F=** primary conductivity pcor
CTC=F	**F=** primary conductivity tcor
CS=F	**F=** primary conductivity slope
PC1=F	**F=** pressure C1
PC2=F	**F=** pressure C2
PC3=F	**F=** pressure C3
PC1=F	**F=** pressure D1
PT1=F	**F=** pressure T1
PT2=F	**F=** pressure T2
PT3=F	**F=** pressure T3
PT4=F	**F=** pressure T4
PS=F	**F=** pressure slope
PO=F	**F=** pressure offset
PM=F	**F=** pressure M
PB=F	**F=** pressure B
AltVolt=N	**N=** CTD A/D voltage number for altimeter
AltScale=F	**F=** altimeter scale factor

General Setup Commands

Format=x

x= output format.

For **x** < 128, any combination of following can be output by adding parameter *value* to **x** (applicable to SBE 46 or other device):

Parameter	Value
Altimeter height	1
Depth	2
Temperature	4
Conductivity	8
Pressure	16
Salinity	32
Sound velocity	64

For **x** > 128, output is one of following **SBE 14** formats:

Parameter	x
Altimeter height	128 + 1 = 129
Depth	128 + 2 = 130
Pressure	128 + 16 = 144
Pressure + Altimeter height	128 + 1 + 16 = 145
Depth + Altimeter height	128 + 1 + 2 = 131

Note:
For the SBE 46, up to four parameters can be output.

Examples:

- Depth only (not SBE 14 format) - **Format=2**.
- Depth only (SBE 14 format) - **Format=130**.
- All 7 variables - **Format= 127** (= 1 + 2 + 4 + 8 + 16 + 32 + 64)
- Depth, temperature, conductivity, and pressure to SBE 46 - **Format=30** (= 2 + 4 + 8 + 16)

Baud=x

x= baud for CDO (300, 600, 1200, 2400, 4800, 9600, or 19200). For SBE 14, must be 300. For SBE 46, must be 1200, 2400, 4800, or 9600.

Note:
Baud= must be consistent with the baud selected in SEATERM's Configuration Options dialog box. If you change the baud with **Baud=**, SEATERM will no longer be able to communicate with the Deck Unit. Select SBE 11 Remote Out in the Configure menu, select the new baud, and click OK. Then click Connect on the Toolbar to reconnect at the new baud.

NAvg=x

x= number of scans to average for CDO. Minimum is based on output baud (**Baud=**) and format:

Minimum **NAvg** = (24 * NBITS / Baud) + 1
where
NBITS = 40 if output formatted for SBE 14
Otherwise,
NBITS=100 * number of output variables.
CDO microcontroller verifies that **NAvg** is greater than or equal to minimum; if you try to enter a value that is too low, microcontroller sets **NAvg** to minimum.

Example: Minimum Number of Scans to Average

Baud is 300 and output format is SBE 14, minimum **NAvg** = (24*40/300)+1= 4.2, round up to 5. With **NAvg=5**, SBE 14 display updates every 0.21 seconds (= 5 scans/ 24 scans/second)

Lat=x

x= latitude (in degrees) to use in calculation of depth from pressure.

Note:
The depth calculation is based on an assumption that the system is operating in salt water. For fresh water applications, this introduces a small error in the depth calculation.

Notes:
An alarm can be set up for the Deck Unit as well as for a CDO remote device:
- The Deck Unit alarm automatically sounds if a bottom contact switch is used with the CTD.
- The Deck Unit alarm can also be set up to sound based on pressure and/or altimeter data in SEASAVE's Configure Outputs menu (Configure Outputs / SBE 11plus Alarms).

Alarm Commands

CDO supports three types of alarms:
- Bottom Contact Alarm: Alarm is set when bottom contact bit in modulo word is set and pressure is greater than **PEnable**.
- Pressure Alarm: Alarm is set when pressure is less than **PSet** and greater than **PEnable**.
- Altimeter Alarm: Alarm is set when altimeter height is less than **AltSet** and pressure is greater than **PEnable**. Alarm is reset when altimeter height is greater than **AltSet** + **AltHyst**.

The SBE 14 or SBE 46 alarm sounds when the alarm is set. If the alarm is set and the output format is not for the SBE 14, the character *A* is transmitted after the last variable in the data scan.

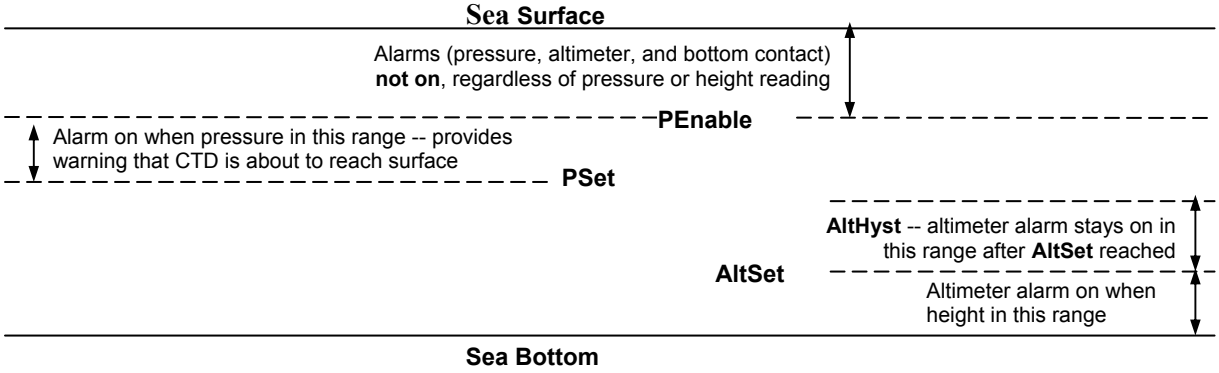

Alarms=x — **x**= alarm enable parameter.
If **x=0**, all alarms are disabled. Enable any combination of alarms by adding alarm *value* to **x**:

Alarm	Value
Bottom contact	1
Pressure	2
Altimeter	4

Examples:
To enable Bottom Contact alarm, set **Alarms=1**.
To enable all 3 alarms, set **Alarms= 7** (=1 + 2 + 4)

PEnable=x — **x**= minimum pressure (decibars) to enable ***all*** alarms.

PSet=x — **x**= pressure (decibars) to turn on pressure alarm.

AltSet=x — **x**= distance above bottom (meters) to turn on altimeter alarm.

AltHyst=x — **x**= maximum change in distance above bottom (meters) for altimeter hysteresis.

Note:
Stop the data output by pressing the Enter key one or more times.

Diagnostic Commands

Go or **Run** — Output CDO data to computer. CDO data appears in SEATERM, in selected output format. Valid only for non-SBE 14 formats (**Format < 128**). Useful for diagnostic purposes.

Converted Data Output Data Format

For Non-SBE 14 formats **(Format < 128)**

Parameters (if selected) are output in the following order:

Parameter	Format	Units
Pressure	pppp.p	decibars
Depth	dddd.d	meters
Altimeter height	aaaa.a	meters
Temperature	tt.ttt	deg C ITS-90
Conductivity	c.cccc	S/m
Salinity	ss.sss	PSU
Sound Velocity	vvvv.v	meters/second

Two spaces follow each parameter. Each scan of output data is terminated with a carriage return, line feed.

If using the SBE 46 LCD Display Box, up to four parameters can be displayed. See the SBE 46 manual for details on setting up the display with labels for each parameter.

For SBE 14 formats **(Format > 128)**

Altimeter height, depth, and pressure are each a maximum of 4 digits, displayed to the nearest meter or decibar (as applicable). If the output format is set for altimeter height + depth or pressure: altimeter height displays to a maximum of 3 digits, alternating with the depth or pressure on the display.

Section 9: Setting Up Water Sampler

Notes:
- The 300 baud modem interface, now standard in both the Deck Unit and CTD, was optional in Deck Units with serial number 700 and lower and in 9*plus* CTDs with serial number 785 and lower.
- For use with the G.O. 1015 - Deck Unit must have optional control module for G.O. 1015 as well as the 300-baud modem interface.

The 300-baud modem interface for a water sampler allows the SBE 911*plus* to be used with an SBE 32 Carousel Water Sampler, G.O. 1015 Rosette, or G.O. 1016 Rosette. The modem permits water sampler control through the Deck Unit or via our SEASAVE software. Bottles may be fired sequentially or (SBE 32 or G.O. 1016 only) in any order. Note that the modem interface must be installed in both the Deck Unit **and** the CTD. This section covers:

- Setting up the Deck Unit dip switches to select and interface with a water sampler
- Setting up SEASAVE to select and interface with a water sampler
- Using the Deck Unit or SEASAVE to fire bottles

Setting Deck Unit Modem PCB Dip Switches

Note:
A switch is *ON* when pushed in at the position number.
In the photo below, positions 1, 2, 3, 4, and 8 are *ON*; positions 5, 6, and 7 are *OFF*.

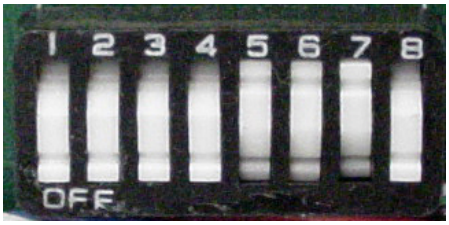

Set SW1 positions 1 through 4 as follows:

Water Sampler Type	SW1 Position			
	1	2	3	4
SBE 32 Carousel	ON	ON	ON	ON
G.O. 1015 Rosette	OFF	ON	ON	ON
G.O. 1016 Rosette	ON	OFF	ON	ON

If using a G.O. 1016, set the Arm offset to adjust the *home* position with SW1 positions 5 through 8 as follows:

Arm Offset (degrees)	SW1 Position			
	5	6	7	8
-2.8	ON	ON	ON	ON
-2.4	OFF	ON	ON	ON
-2.0	ON	OFF	ON	ON
-1.6	OFF	OFF	ON	ON
-1.2	ON	ON	OFF	ON
-0.8	OFF	ON	OFF	ON
-0.4	ON	OFF	OFF	ON
0.0 *	**OFF**	**OFF**	**OFF**	**ON**
0.4	ON	ON	ON	OFF
0.8	OFF	ON	ON	OFF
1.2	ON	OFF	ON	OFF
1.6	OFF	OFF	ON	OFF
2.0	ON	ON	OFF	OFF
2.4	OFF	ON	OFF	OFF
2.8	ON	OFF	OFF	OFF
3.2	OFF	OFF	OFF	OFF

* Nominal

Setting Up Water Sampler in SEASAVE

1. Double click on Seasave.exe.

Note:
The same COM port is used for the water sampler and to send pump control commands to a custom 9*plus*; pump control does not interfere with water sampler operation.

2. Click Configure Inputs. In the Configure Inputs dialog box, click the Serial Ports tab. In the *Water Sampling and 911 Pump Control Serial Port* section, select the COM port connected to the Deck Unit *Modem Channel* connector.
Also set up other serial ports (CTD Serial Port is the port connected to the Deck Unit *SBE 11 Interface* connector).

3. In the Configure Inputs dialog box, click the Water Sampler tab. The dialog box looks like this:

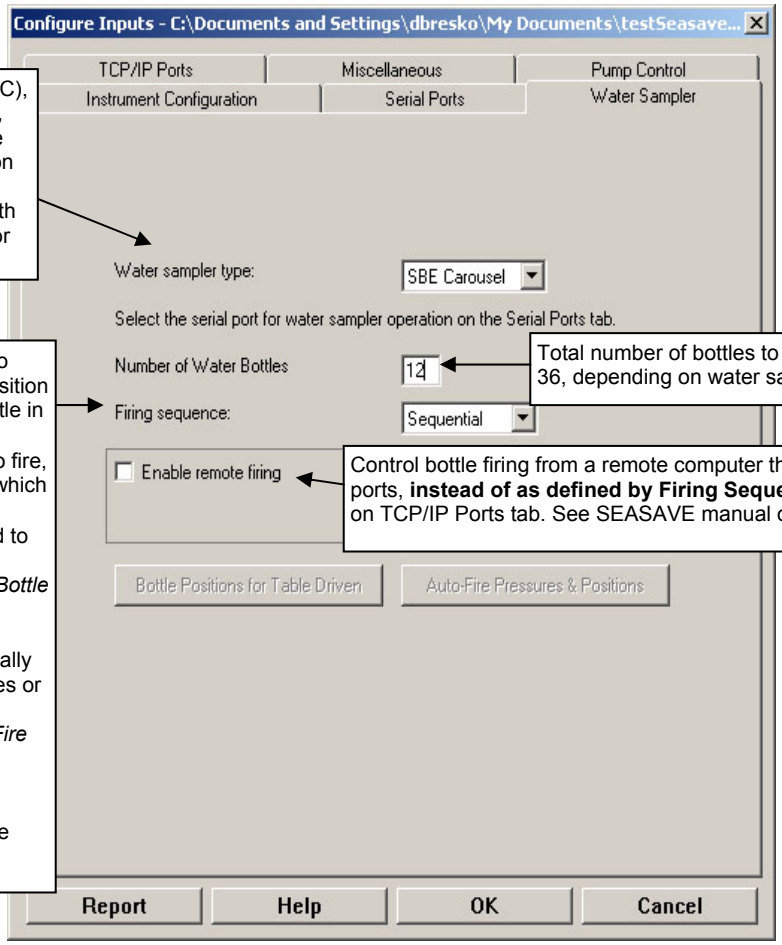

SBE Carousel (SBE 32, 32C, or 32SC), G.O.1015 or 1016, Hydro-Bios, IOW, SBE ECO (SBE 55), or None. Define serial port for water sampler operation on Serial Ports tab.
Note: SBE ECO is not compatible with SBE 911*plus*. Hydro-Bios and IOS for custom applications only.

Total number of bottles to be closed - up to 36, depending on water sampler capacity.

- **Sequential** - When commanded to fire, bottles are fired in order of position (bottle in position #1 fired first, bottle in position #2 fired second, etc.).
- **User Input** - When commanded to fire, SEASAVE prompts you to select which bottle to fire.
- **Table Driven** - When commanded to fire, bottles are fired in order pre-defined by user-input table. Click *Bottle Positions for Table Driven* to input bottle positions.
- **Auto Fire** – Fire bottles automatically at user-input, pre-defined pressures or depths (can also fire some bottles manually), on upcast. Click *Auto-Fire Pressures & Positions* to input parameters. (Note: Auto Fire on downcast is available with use of -autofireondowncast command line parameter.)

Control bottle firing from a remote computer through TCP/IP ports, **instead of as defined by Firing Sequence**. Select ports on TCP/IP Ports tab. See SEASAVE manual or Help for details.

Make the desired selections and click OK.

4. If desired, set up a plot window in SEASAVE to show the bottle closure order and or place a horizontal line in the plot to indicate the data associated with a bottle closure:
   A. Right click in a Plot Display window and select Modify. The Plot Display dialog box appears:

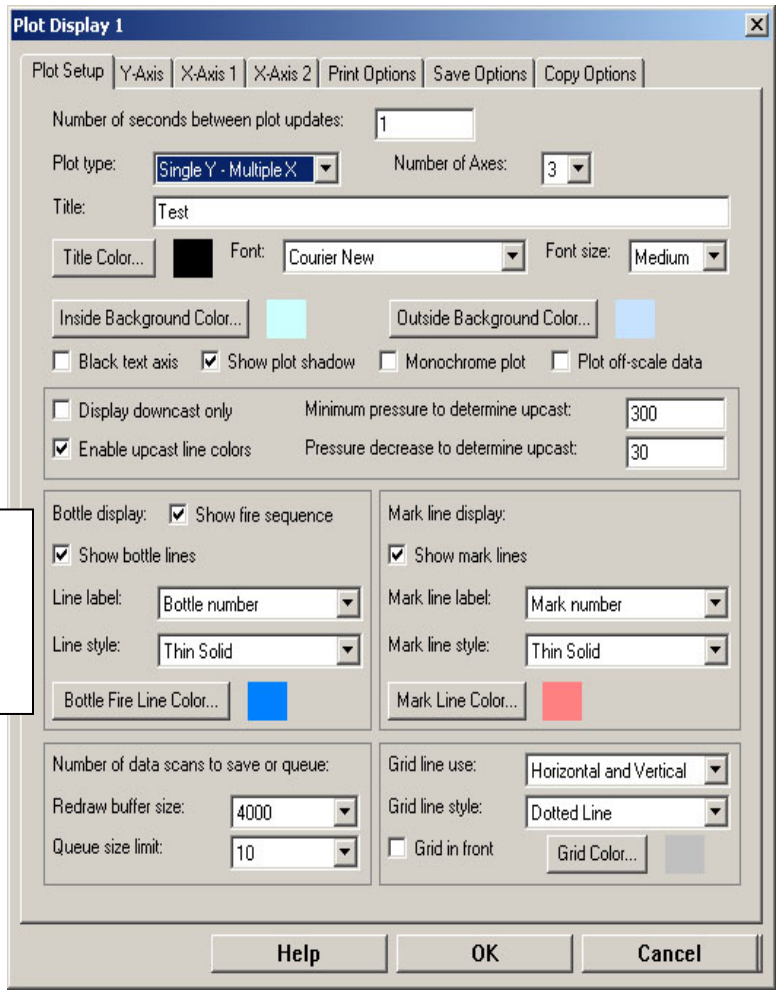

- **Show fire sequence**: List closure order to right of plot.
- **Show bottle lines**: Place horizontal lines in plot to indicate data associated with closures; **label**, **style**, and **color** define line.

   B. Select parameters as desired, and click OK.

Note:
See *Section 11: Operating System* for details on starting data acquisition. After acquisition begins, to fire a bottle:
- Press Ctrl F3, or
- In the Real-Time Control menu, select *Fire Bottle Control*. The *Bottle Fire* dialog box appears (you can leave this open throughout the cast). The dialog box shows what bottle will be fired next (for sequential or table driven bottle firing). Click *Fire Bottle* when desired.

Section 10: Setting Up RS-232 Serial Data Uplink

As an option, the SBE 911*plus* system can be equipped to provide an interface for a serial data output instrument connected to the SBE 9*plus* CTD's JT4. The serial data is multiplexed into the 9*plus* telemetry stream, and is de-multiplexed by the 11*plus* V2 Deck Unit. The de-multiplexed data is output from the Deck Unit at the back panel's *9600 Baud Uplink* connector.

The 9600 baud uplink operates only in one direction, from the CTD to the Deck Unit. Communication from the Deck Unit to the serial data output instrument (through the CTD) is provided via the 300 baud FSK modem used for water sampler control. Note that the 911*plus* supports use of the serial data output instrument and water sampler in the same cast. Instrument commands sent via the 300 baud modem are transmitted from the CTD to the instrument at the transmission rate of the instrument.

Data from the serial output instrument is transmitted from the Deck Unit to the computer at 19200 baud.

The diagram below shows a schematic of the serial data instrument communications.

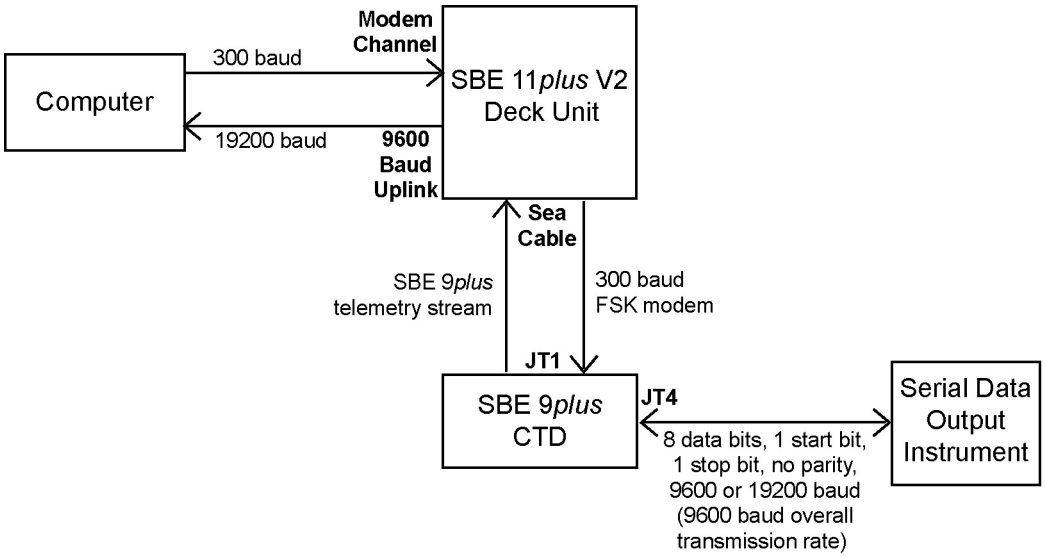

Serial Data Output Instrument Requirements

Note:
Baud is defined as bits/second. Each 8 bit byte that is to be transmitted has a start and stop bit added, providing 10 bits total. Thus, the 9600 baud data rate allows the transmission of 960 bytes/second.

The serial data output instrument must be configured to transmit data with 1 start bit, 8 data bits, no parity, and 1 stop bit, with baud rate as follows:

- 9600 baud, or
- 19200 baud – However, the continuous rate of transmission may not exceed 9600 baud (960 bytes/second). Therefore, the serial data output instrument must transmit at 19200 baud in *burst* mode. Burst mode data transmissions must be separated by intervals with no data transmission, resulting in an average data rate of 960 bytes/second or less.

Note that when purchasing or retrofitting a 9*plus* to accommodate the serial data uplink, the user must select either 9600 or 19200 baud communication interface.

SBE 9*plus* CTD Requirements

The RS-232 serial data uplink can be included when the 9*plus* is ordered, or the 9*plus* can be retrofitted (at the factory). The retrofit requires:

- Logic PCB that generates the 9*plus* control at the normal rate, but moves data onto the seacable at twice the normal rate.
- Modem PCB (for 300 baud FSK modem channel for water sampler control) that also is able to accommodate the serial data input.
- Change to the backplane wiring.
- 4-pin JT4 connector on the top end cap for connection to the serial data output instrument.

These changes make the 9*plus* incompatible with 11*plus* V2 Deck Units set up for standard rate data transmission.

SBE 11*plus* V2 Deck Unit Requirements

Note:
The *9600 Baud Uplink* connector is included as standard on all 11*plus* V2 with serial number 637 and higher. For older units, the connector was included only if the user ordered the 11*plus* V2 with the serial data uplink option.

If already equipped with the 300 baud FSK modem channel for water sampler control and with the *9600 Baud Uplink* connector, the 11*plus* V2 requires only a change in jumper positions to process the multiplexed data stream. Remove the 11*plus* V2 bottom cover, and set the following jumpers on the Receiver PCB (PCB with transformers on it; see drawing 40934C for the jumper locations):

Jumper	Position
J1	Pins 2-3
J2	Pins 2-3
J3	Pins 1-2
J4	Pins 1-2
J5	Short
J6	Pins 2 to 3

System Limitations

A 911*plus* system set up for serial data uplink has the following limitations:

- Seacable length - The maximum seacable length that will reliably maintain data transmission is 8000 meters.
- Autonomous water sampler operation - The 9*plus* cannot be used with an SBE 17*plus* V2 SEARAM, preventing water sampler operation on non-conducting cable.
- Water sampler - The 911*plus* cannot be used with a G.O. 1015 water sampler.
- Compatibility – A 9*plus* that includes the RS-232 serial data uplink is incompatible with an 11*plus* V2 set up for standard transmission.
- Tape recorder interface – An 11*plus* V2 with jumpers set for serial data uplink cannot output data through *Tape Recorder* on the 11*plus* V2 Back Panel.

Theory of Operation

Note:
The 300 baud modem interface, now standard in both the Deck Unit and CTD, was optional in Deck Units with serial number 700 and lower and in 9*plus* CTDs with serial number 785 and lower.

The 9*plus* and 11*plus* V2 must be equipped with the standard data telemetry channel as well as the 300 baud FSK modem channel. Additionally, the 9*plus* must be equipped with the optional serial data uplink. The 300 baud modem channel features two-way communications and is used for water sampling commands and responses. This channel is also used to communicate with the serial data output instrument.

Water sampling communications are carried out with 1 start bit, 8 data bits, no parity bit, and 1 stop bit. ASCII characters only require 7 data bits to express the standard character set. The system uses the 8th data bit to flag communications on the modem channel as water sampler or serial data output communication:

- If a byte is received by the 9*plus* with the 8th bit set, it is interpreted by the 9*plus* as a command to the water sampler, and is routed to the water sampler. Similarly, if a byte is received by the 11*plus* V2 with the 8th bit set, it is interpreted as a water sampler control response to a bottle closure command.

- If a byte is received by the 9*plus* without the 8th bit set, it is interpreted by the 9*plus* as a command to the serial data output instrument, and is routed to the serial data output instrument at the appropriate baud rate (9600 or 19200 baud). The serial data output instrument response is transmitted to the 9*plus* and then multiplexed into the 9*plus* telemetry stream and de-multiplexed by the 11*plus* V2 Deck Unit.

The 9600 baud serial uplink communications channel is time dimension multiplexed into the 9*plus* data telemetry channel. Each 9*plus* data scan is transmitted via the seacable at twice the normal speed, leaving a gap in the data stream long enough to accommodate continuous transmission at 9600 baud. Presuming the serial data is coming into the 9*plus* continuously; the 9*plus* buffers serial data until its data scan is complete and then moves the accumulated serial data packet onto the telemetry channel. The first byte of the serial data packet defines the number of bytes that follow. This allows binary or ASCII data to be transmitted over the serial uplink.

The 11*plus* V2 splits the data stream, processing the 9*plus* scan normally and sending the serial data at 19200 baud to a port on the back plane for processing by the user's computer.

Section 11: Operating System

Note:
It is possible to use the SBE 17*plus* V2 SEARAM to record 9*plus* data in memory at the same time as 9*plus* data is transmitted real-time through the Deck Unit. This provides a data back-up in case there are data transmission problems over the sea cable. See the 9*plus* manual for wiring and deployment details.

This section covers:
- Acquiring real-time data and firing bottles from SEASAVE
- Firing bottles from the Deck Unit front panel

See *Section 3: Mounting and Wiring System* for wiring details.

Acquiring Real-Time Data and Firing Bottles from SEASAVE

Note:
See SEASAVE's Help files for detailed information.

1. Double click on Seasave.exe.
2. Set up the desired display windows. Perform any other desired setup in Configure Inputs and Configure Outputs. See *Using SEASAVE* in *Section 4: Installing and Using Sea-Bird Software* for a brief description of the available configuration options.
3. Push the Power button on the Deck Unit.
4. In the Real-Time Data menu, select *Start*. The dialog box looks like this:

Data Archiving Options:
- **Begin archiving data immediately** to store raw (frequencies and voltages) real-time data as soon as Start button is clicked and communication is established.
- **Begin archiving data when 'Start Archiving' command is sent** to control when data begins to be written to file. This allows you to eliminate scans associated with deploying CTD from ship deck and soaking instrument near surface (alternatively, remove these scans later in SBE Data Processing). If you make this selection, when you click Start button and communication is established, a dialog box with Start Archiving button appears. Click this button when ready to begin saving scans to file, or select Start Archiving in Real-Time Data menu.
- **Do not archive data for this cast** to not save data to a file. Real-time data will still appear in displays.

Configuration Options: Currently selected instrument configuration (.con) file is shown, containing information on number and type of sensors interfacing with 9*plus*, calibration coefficients, and inclusion of NMEA and Surface PAR data with output from Deck Unit. To select different .con file or modify input configuration (.con file, serial ports, water sampler, TCP/IP ports, miscellaneous, and/or pump control), click Configure Inputs. To modify outputs (serial data output, serial ports, shared file output, mark variables, TCP/IP output, TCP/IP ports, SBE 11*plus* alarms, SBE 14 remote display, PC alarms, header form), and/or diagnostics, click Configure Outputs.

- **Timeout in seconds at startup**: Time allowed before first data scan is received from instrument. SEASAVE will *time out* and stop attempting to acquire data if data is not received from instrument within this time period.
- **Timeout in seconds between scans**: Maximum **gap** allowed between scans after first data scan is received from instrument. SEASAVE will *time out* and stop attempting to acquire data if data is not received from instrument within this time period (for example, if a shark bites cable and interrupts data acquisition, SEASAVE stops attempting to acquire data after this gap).

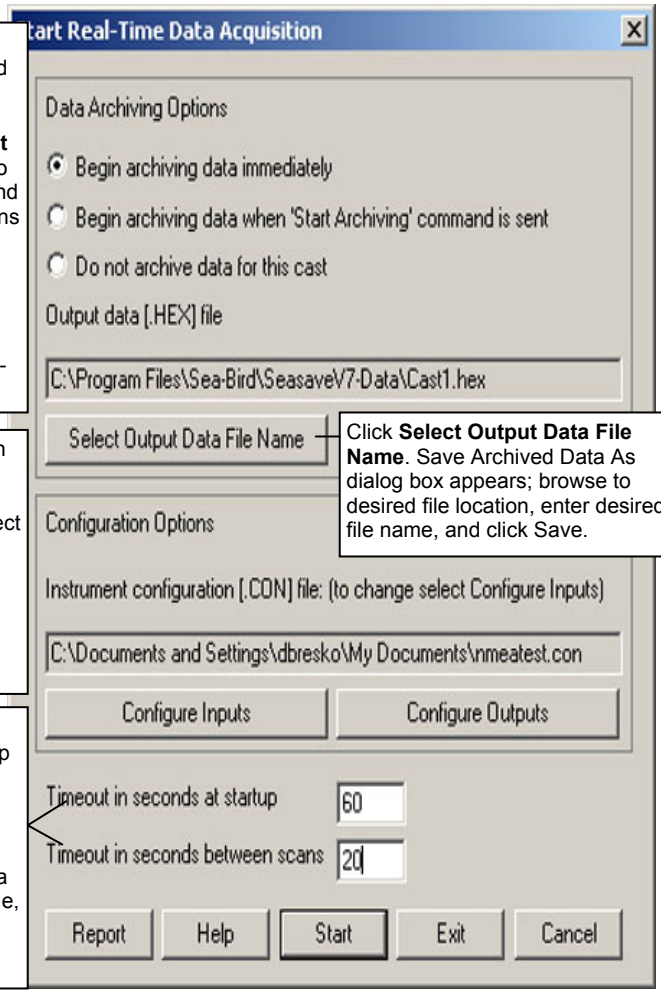

Click **Select Output Data File Name**. Save Archived Data As dialog box appears; browse to desired file location, enter desired file name, and click Save.

Make the desired selections.

5. In the Start Real-Time Data Acquisition dialog box, click *Start*.
   A. If you selected *Begin archiving data immediately* or *Begin archiving data when 'Start Archiving' command is sent* above, and selected *Prompt for Header Information* in the Header Form setup (Configure Outputs), the Header Information dialog box appears. Fill in the desired header and click OK.
   B. If you set up a water sampler in Configure Inputs, SEASAVE sends a Reset command to the water sampler (equivalent to pushing the Reset button on the Deck Unit), and waits up to 60 seconds for confirmation. If confirmation is not received, verify that:
      - Deck Unit power is on.
      - There are connections between the computer ports and Deck Unit *SBE 11 Interface* and *Modem Channel.*
      - The communication settings and COM Ports selected on the Serial Ports tab in Configure Inputs are correct.
   C. If you selected *NMEA position data added* in the .con file, SEASAVE initializes NMEA communications.
   D. If you selected *Check Scan Length* in the Options menu, SEASAVE checks the .con file to verify that the scan length defined by the .con file matches the instrument (i.e., number of sensors, inclusion of NMEA and/or Surface PAR is as defined in the .con file). If a *Scan length error* appears, verify that:
      - You are using the correct .con file.
      - The .con file has been updated as necessary if you added or deleted sensors, added or deleted NMEA or Surface PAR inputs, etc.
   E. SEASAVE sends a message: *Waiting for data . . .* SEASAVE will *time out* if data is not received from the Deck Unit within *Timeout in seconds at startup*.
   F. The data starts appearing in the screen displays.

6. To fire a water sampler bottle from SEASAVE, do one of the following:
   - Press Ctrl F3, or
   - In the Real-Time Control menu, select *Fire Bottle Control*. The *Bottle Fire* dialog box appears (you can leave this open throughout the cast). The dialog box displays the number of the next bottle to be fired. If you selected *User Input* in the water sampler setup (*Section 9: Setting Up Water Sampler*), select the bottle you want to fire next. Click *Fire Bottle* when desired.

   Note:
   If *Auto Fire* firing sequence was selected on the Water Sampler tab in Configure Inputs, the Fire Bottle Control dialog box is not available.

   When SEASAVE receives a bottle fired confirmation from a water sampler:
   - SBE 32 Carousel Water Sampler or G.O. 1016 Rosette – SEASAVE writes a line to an output file (same filename as the data file) with a .bl extension. The .bl file contains the bottle firing sequence number, bottle position, date, time, and beginning and ending scan number (to provide 1.5 seconds of scans) for the fired bottle.
   - G.O. 1015 Rosette – The SBE 9*plus* sets a bit in the modulo word high for 1.5 seconds, and SEASAVE increments the number of bottles fired.

   Note:
   The .bl file has the same path and file name as the data file. For example, if the data file is c:\test1.hex, the .bl file is c:\test1.bl.

   Later, when the raw data file is converted in SBE Data Processing's Data Conversion module, scans identified in the .bl file or marked with a bottle confirmation bit are written to a water bottle file with a .ros extension.

7. To stop data acquisition: In the Real-Time Data menu, select *Stop*. Turn off power to the Deck Unit.

Firing Bottles from Deck Unit Front Panel

Notes:
- **Sea-Bird strongly recommends that you do not *mix* firing bottles from both SEASAVE and the Deck Unit in the same cast**. That is, use only one method to fire bottles to ensure that each bottle is fired only once and in the desired order.
- See the SBE Data Processing manual and or Help files for details on processing data.

Note:
The .bl file has the same path and file name as the data file. For example, if the data file is c:\test1.hex, the .bl file is c:\test1.bl.

Instead of firing bottles from within SEASAVE, you can fire bottles directly from the Deck Unit if desired. Bottles fired directly from the Deck Unit are always fired in sequential order, regardless of the firing sequence setting you input in SEASAVE.

Even though you are firing the bottles from the Deck Unit, SEASAVE still receives a *bottle fired* confirmation from the water sampler if the Deck Unit back panel *SBE 11 Interface* **and** *Modem Channel* are connected to the computer. When SEASAVE receives the confirmation:
- SBE 32 Carousel Water Sampler or G.O. 1016 Rosette – SEASAVE writes a line to an output file (same filename as the data file) with a .bl extension. The .bl file contains the bottle firing sequence number, bottle position, date, time, and beginning and ending scan number (to provide 1.5 seconds of scans) for the fired bottle.
- G.O. 1015 Rosette - The SBE 9*plus* sets a bit in the modulo word high for 1.5 seconds, and SEASAVE increments the number of bottles fired.

Later, when the raw data file is converted in SBE Data Processing's Data Conversion module, scans identified in the .bl file or marked with a bottle confirmation bit are written to a water bottle file with a .ros extension.

See *Acquiring Real-Time Data and Firing Bottles from SEASAVE* above for setting up SEASAVE and starting and stopping real-time data acquisition. Proceed as follows for firing bottles from the Deck Unit:

SBE 32 Carousel

1. Press the *Home/Arm* button to reset the Carousel, so it will close the bottle at position #1 the next time the Fire button is pushed. The Home/Arm LED comes on and stays on until the first bottle is fired.

2. Press the *Fire* button. The Carousel will fire bottle 1.

3. Repeat Step 2 to fire each bottle; the Carousel will fire bottles in sequential order.

G.O. 1015 Rosette

1. Press the *Home/Arm* button to power the Rosette. The Home/Arm LED comes on 15 seconds later to indicate the Rosette is ready to fire.

2. Press the *Fire* button to fire the first bottle.

3. Repeat Steps 1 and 2 to fire each bottle; the Rosette will fire bottles in sequential order.

G.O. 1016 Rosette

1. Press the *Home/Arm* button to reset the Rosette, so it will fire the bottle at position #1 the next time the Fire button is pushed. The Home/Arm LED comes on and stays on until the first bottle is fired.

2. Press the *Fire* button. The Rosette will fire bottle 1.

3. Repeat Step 2 to fire each bottle; the Rosette will fire bottles in sequential order.

Processing Data

Sea-Bird provides software, SBE Data Processing, for converting the raw .hex data file into engineering units, editing (aligning, filtering, removing bad data, etc.) the data, calculating derived variables, and plotting the processed data. See the SBE Data Processing manual and/or Help files for details.

However, sometimes users want to edit the raw .hex data file before beginning processing, to remove data at the beginning of the file corresponding to instrument *soak* time, to remove blocks of bad data, to edit the header, or to add explanatory notes about the cast. Editing the raw .hex file can corrupt the data, making it impossible to perform further processing using Sea-Bird software. **Sea-Bird strongly recommends that you first convert the data to a .cnv file (using the Data Conversion module in SBE Data Processing), and then use other SBE Data Processing modules to edit the .cnv file as desired.**

Notes:
- Although we provide this technique for editing a raw .hex file, **Sea-Bird's strong recommendation, as described above, is to always convert the raw data file and then edit the converted file.**
- This technique for editing a file cannot be used with a .dat file created by older versions of SEASAVE (< 6.0). **Sea-Bird is not aware of a technique for editing a .dat file that will not corrupt it.**

The procedure for editing a .hex data file described below has been found to work correctly on computers running Windows 98, 2000, and NT. **If the editing is not performed using this technique, SBE Data Processing may reject the edited data file and give you an error message.**

1. **Make a back-up copy of your .hex data file before you begin.**
2. Run **WordPad**.
3. In the File menu, select Open. The Open dialog box appears. For *Files of type*, select *All Documents (*.*)*. Browse to the desired .hex data file and click Open.
4. Edit the file as desired, **inserting any new header lines after the System Upload Time line**. Note that all header lines must begin with an asterisk (*), and *END* indicates the end of the header. An example is shown below (for an SBE 21), with the added lines in bold:

```
* Sea-Bird SBE 21 Data File:
* FileName = C:\Odis\SAT2-ODIS\oct14-19\oc15_99.hex
* Software Version Seasave Win32 v1.10
* Temperature SN = 2366
* Conductivity SN = 2366
* System UpLoad Time = Oct 15 1999  10:57:19
* Testing adding header lines
* Must start with an asterisk
* Place anywhere between System Upload Time & END of header
* NMEA Latitude = 30 59.70 N
* NMEA Longitude = 081 37.93 W
* NMEA UTC (Time) = Oct 15 1999  10:57:19
* Store Lat/Lon Data = Append to Every Scan and Append to .NAV
File When <Ctrl F7> is Pressed
** Ship:       Sea-Bird
** Cruise:     Sea-Bird Header Test
** Station:
** Latitude:
** Longitude:
*END*
```

5. In the File menu, select Save (**not** Save As). If you are running Windows 2000, the following message displays:
   `You are about to save the document in a Text-Only format, which will remove all formatting. Are you sure you want to do this?`
   Ignore the message and click *Yes*.
6. In the File menu, select Exit.

Section 12: Data Formats

Note:
The **CTD**'s output format differs from the Deck Unit's in several respects:
- The Deck Unit changes the order of the output.
- The Deck Unit automatically strips CTD bytes 31-36 (unused and marker bytes) from the data.
- The Deck Unit inserts Surface PAR and NMEA data if applicable.

See the SBE 9*plus* manual for details on the CTD output format.

This section discusses the data output format:

- On the Deck Unit's LED display, and
- From the Deck Unit's *SBE 11 Interface RS-232* and *IEE-488* output ports

For output formats from the Deck Unit's Remote Out and 9600 Baud Uplink connectors, see *Section 8: Setting Up Remote Output* and *Section 10: Setting Up RS-232 Serial Data Uplink* respectively.

For applications that do not require all five frequency channels, all eight A/D channels, Surface PAR, and NMEA, unused channels can be suppressed by making the appropriate selection in the configuration (.con) file (see *Section 5: Setting Up System* for details). This can result in a substantial saving in disk space required to store CTD data. Unless noted otherwise, this section describes data output for a Deck Unit set to use all channels.

Note:
The notation on the switches may be either of the following:
- 0, 1, 2, 3, 4, 5, 6, 7, 8, 9, 10, 11, 12, 13, 14, 15
- 0, 1, 2, 3, 4, 5, 6, 7, 8, 9, A, B, C, D, E, F (A through F are equivalent to 10 through 15 respectively)

Thumbwheel settings described in this manual will use the 0-15 notation, with the other notation in brackets (for example*, set the switch to 11 [B]*).

The data words (each containing three bytes) are ***summarized*** below:

Word from Deck Unit	Description	Deck Unit Thumbwheel Switch Position
0	Primary Temperature	0
1	Primary Conductivity	1
2	Pressure	2
3	Secondary Temperature	3
4	Secondary Conductivity	4
5	A/D channels 0-1	5
6	A/D channels 2-3	6
7	A/D channels 4-5	7
8	A/D channels 6-7	8
9	Surface PAR	9
10	Pressure temperature compensation and modulo count	10 [A]
	CTD status	11 [B]
-	Bytes available in IEEE-488 buffer	12 [C]
-	Bytes available in RS-232 buffer	13 [D]
Appended to end of scan *	NMEA data **	-

* NMEA data appended to end of scan for IEEE-488 only. For RS-232, NMEA data is output on a line by itself, once per second.
** See *Section 6: Setting Up NMEA Interface* for NMEA output data format.

The word numbers indicate the order of the data scan sent to a computer via the IEEE-488 or RS-232 port. Detailed below is the output format on the Deck Unit's LED display, followed by the IEEE-488 and RS-232 data output format.

Deck Unit LED Display Format

Data words can be selected for display with the thumbwheel switch on the Deck Unit front panel. The display is updated several times per second.

When the thumbwheel switch is set to a suppressed channel, the LED display is blank.

Switch Position	Description	Discussion
0	Primary Temperature	Data displays as a frequency in Hz.
1	Primary Conductivity	
2	Pressure	
3	Secondary Temperature	
4	Secondary Conductivity	
5	A/D channels 0-1	Each switch position shows information from 2 channels. From left to right, first 4 digits displays lower channel (e.g., V0), and second 4 digits displays next channel (e.g., V1). Each voltage displays as decimal value (N) of 12-bit number, which is binary representation of analog voltage. Display shows 4095 for 0 volts, and 0 for 5 volts: V = 5 (1 - [N / 4095])
6	A/D channels 2-3	
7	A/D channels 4-5	
8	A/D channels 6-7	
9	Surface PAR	Voltage displays as decimal value (N) of 12-bit number, which is binary representation of analog voltage. Display shows 0 for 0 volts, and 4095 for 5 volts: V = N / 819
10 [A]	Pressure sensor temperature and modulo count	• Four digits **left of decimal point** - pressure sensor temperature counts, range of 0 - 4095 (2500 corresponds to approximately 22 ºC, typical room temperature). • Four digits **right of decimal** point - incrementing modulo count. Modulo count is 8-bit number generated by CTD that increments 1 count for each scan. If Deck Unit averages data, modulo count increments by number of scans averaged. Provides a check on system data integrity. Maximum value that can be displayed is 255; display starts over at 1 each time count gets to 255.
11 [B]	CTD status	Four digits, from **right to left**: • Pump status - 1 = pump is on, 0 = pump is off. • Bottom contact switch status - 1 = switch is open or not installed (no contact), 0 = switch is closed. • G.O. 1015 water sampler interface confirm signal - 1 (for approximately 1.5 seconds) = Deck Unit detects confirm signal from G.O. 1015 indicating a bottle has been fired, 0 = no confirm signal detected. • CTD modem carrier detect - 0 = CTD modem detects Deck Unit modem's carrier signal, 1 = not detected.
12 [C]	Number of bytes available in IEEE-488 buffer	When transferring data to a computer, Deck Unit places data in a buffer at rate it is acquired, allowing Deck Unit and computer to operate with some independence. Data is removed from buffer as computer requests it. If computer spends too much time calculating and displaying data, it may start to fall behind and number of available bytes will decrease. If number of available bytes is less than an entire scan, Deck Unit's Overflow LED comes on and stays on until a Reset command is received. If buffer overflows, some data will have been lost. Buffer overflow sometimes occurred in old computers with slow processors - it should not occur in computer with 80386 or faster processors.
13 [D]	Number of bytes available in RS-232 buffer	
14 [E] & 15 [F]	Unused	-

Raw Output Data Format

Data output from the SBE 11 Interface (RS-232 or IEEE-488) is raw data - frequencies and A/D voltages. This raw data can be saved in a .hex file.

Note:
MSB = most significant bit
LSB = least significant bit

IEEE-488 Output

Data is output in the following order:

Word	Byte	Description	Discussion
0	0-2	Primary temperature	Frequency f = (Byte 0 * 256) + Byte 1 + (Byte 2 / 256)
1	3-5	Primary conductivity	Frequency f = (Byte 3 * 256) + Byte 4 + (Byte 5 / 256)
2	6-8	Pressure	Frequency f = (Byte 6 * 256) + Byte 7 + (Byte 8 / 256)
3	9-11	Secondary temperature	Frequency f = (Byte 9 * 256) + Byte 10 + (Byte 11 / 256)
4	12-14	Secondary conductivity	Frequency f = (Byte 12 * 256) + Byte 13 + (Byte 14 / 256)
5	15	A/D channel **0** (8 MSBs)	Each 12-bit number (N) is a binary representation of analog voltage. N's value is 4095 for 0 volts, 0 for 5 volts: V = 5 (1 - [N / 4095]) *Example:* Byte 15 = **00110111** Byte 16 = **0100**1111 For A/D channel 0, N = **001101110100** = 884 decimal V = 5 (1 - [884 / 4095]) = 3.921 volts
	16	A/D channel **0** (4 LSBs 4-7) & **1** (4 MSBs 0-3)	
	17	A/D channel **1** (8 LSBs)	
6	18	A/D channel **2** (8 MSBs)	
	19	A/D channel **2** (4 LSBs 4-7) & **3** (4 MSBs 0-3)	
	20	A/D channel **3** (8 LSBs)	
7	21	A/D channel **4** (8 MSBs)	
	22	A/D channel **4** (4 LSBs 4-7) & **5** (4 MSBs 0-3)	
	23	A/D channel **5** (8 LSBs)	
8	24	A/D channel **6** (8 MSBs)	
	25	A/D channel **6** (4 LSBs 4-7) & **7** (4 MSBs 0-3)	
	26	A/D channel **7** (8 LSBs)	
9	27	Unused	Surface PAR: 12-bit number (N) is binary representation of analog voltage. N's value is 0 for 0 volts, 4095 for 5 volts: V = N / 819 *Example:* Byte 34 = 1111**0011** Byte 35 = **01110100** N = **001101110100** = 884 decimal V = 884 / 819 = 1.079 volts
	28	First 4 bits unused Surface PAR channel (4 MSBs 0-3)	
	29	Surface PAR channel (8 LSBs)	
10	30	Pressure sensor temperature (8 MSBs)	**Pressure sensor temperature**: 12-bit number is binary representation of temperature, ranging from 0 to 4095 (2500 corresponds to approximately 22 ºC, typical room temperature). **CTD status**: • Bit 0 Pump status - 1 = pump on, 0 = pump off. • Bit 1 Bottom contact switch status - 1 = switch open (no contact), 0 = switch closed. • Bit 2 G.O. 1015 water sampler interface confirm signal - 1 = Deck Unit detects confirm signal from G.O. 1015, 0 = not detected. • Bit 3 CTD modem carrier detect - 0 = CTD modem detects Deck Unit modem carrier signal, 1 = not detected.
	31	Pressure sensor temperature (4 LSBs 4-7) CTD status (0-3)	
	32	Modulo count (EOI line asserted).	8-bit number from CTD increments 1 count for each scan (cycles from 0 to 255, then restarts at 0). If Deck Unit averages data, modulo increments by number of scans averaged. Modulo provides a check on data integrity. Missed scans caused by sea cable errors cause *jumps* in the count.
End of scan	-	NMEA data	See *Section 6: Setting Up NMEA Interface*.

To reduce data storage space requirements, the Deck Unit can suppress unused words, based on the system configuration, from the data stream. For example:

- If secondary temperature and conductivity sensors are not used, words 3 and 4 can be stripped from the data stream.
- If not all A/D channels are used, the unused words can be stripped from the data stream (words 5 through 8 as applicable). Words are suppressed from last to first. For example, for a system with only two A/D voltage words, the channels are V0, V1, V2, and V3.
- If Surface PAR is not used, word 9 can be stripped from the data stream.

This suppression is done automatically if using SEASAVE. The information in the instrument configuration (.con) file is used by SEASAVE to automatically program the Deck Unit to delete unused words.

If words are suppressed, the listing above is shortened. For example, for a system with CTD only (secondary temperature and conductivity, all A/D channels, and Surface PAR all suppressed; and no NMEA data), the IEE-488 output is:

Word	Byte	Description
0	0-2	Primary temperature
1	3-5	Primary conductivity
2	6-8	Pressure
3	9	Pressure sensor temperature (8 MSBs)
	10	CTD status (4 LSBs) Pressure sensor temperature (4 MSBs)
	11	Modulo count (EOI line asserted)

RS-232 Output

Data output format is the same as described above for IEE-488 output, **except**:

- Each byte is sent as two ASCII-encoded characters. The first character is the hexadecimal representation of the most significant 4 bits; the second character is the hexadecimal representation of the least significant 4 bits.

  For example, a byte with a value of 42 (base 10) or 2A (hexadecimal) is sent as:
  First character 32 (ASCII for 2)
  Second character 41 (ASCII for A)

- The two characters representing the modulo count is preceded by two pressure sensor temperature characters and two *zero* characters. The modulo characters are followed by a carriage return character (0D, base 16) and then a line feed character (0A, base 16). Thus, the number of **characters per scan** is:

  (words/scan * 3 bytes/word * 2 characters/byte) + 2 (carriage return & line feed)

  For example, for a 4-word data stream:
  (4 words/scan * 3 bytes/word * 2 characters/byte) + 2 = 26 characters

- NMEA data is output on a line by itself, once per second, instead of being appended to the end of each scan.

Calculation of Engineering Units in SEASAVE

SEASAVE allows you to select raw (frequencies and voltages) and/or converted data (decibars, ºC, etc.) for display during data acquisition. SEASAVE calculates converted data in engineering units by applying the calibration coefficients in the configuration (.con) file to the raw data from each sensor.

Each sensor's Calibration Sheet lists its calibration coefficients as well as the equation used by SEASAVE to derive engineering units from the raw data. An exception is the calculation of pressure temperature compensation for the Paroscientific Digiquartz pressure sensor, which is described below:

Pressure Temperature Compensation

T_D = M * (12-bit pressure temperature compensation word) + B (°C)
Where M = AD590M and B = AD590B from the calibration sheet

Raw pressure temperature compensation has a decimal value between 0 and 4095.

Example:
Byte 30 = **10101000** Byte 31 = **0001**0101
M = 0.01258 and B = -9.844 (from calibration sheet)

N = **101010000001** binary = 2689 decimal
T_D = (0.01258 * 2689) – 9.844 = 23.98 °C

Pressure temperature is computed using a backward-looking 30-second running average to prevent bit transitions in pressure temperature from causing small jumps in computed pressure. Because the heavily insulated pressure sensor has a thermal time constant on the order of one hour, the 30-second average does not significantly alter the computed pressure temperature.

Calculation of Engineering Units in SBE Data Processing

Our data processing program, SBE Data Processing, starts with the raw (.hex) data, converts it to engineering units using the information in the configuration (.con) file, and then processes it. Thus, even if calibration coefficients in your .con file were incorrect during data acquisition (SEASAVE), the saved raw data is correct, and can be processed with the corrected calibration coefficients.

Section 13: Troubleshooting

WARNING!
Life-threatening high voltages are present in the Deck Unit and the underwater units when power is on. These hazardous voltages persist for up to 1 minute after removal of power. To protect against electrical shock, turn off the Deck Unit, disconnect the AC power cord from the Deck Unit, and then wait a full minute before attempting service. Always disconnect the AC power cord before checking fuses.

This section reviews common problems in operating the Deck Unit, and provides the most likely causes and solutions.

Servicing should be performed by experienced technicians who have been trained to work with complex mechanical/electrical equipment.

For protection of the circuitry, we recommend removing AC power and then waiting for 1 minute for supply capacitor discharge before opening housings, changing connections, removing or inserting circuit cards, or otherwise working on the equipment.

Problem 1: SEASAVE Does Not Collect Any Data

Cause/Solution 1:
This may be caused by incorrect instrument configuration in the .con file. Verify the settings in the instrument configuration (.con) file, in SEASAVE's Configure Inputs. These settings must match the current CTD configuration - CTD type (911*plus*), number and type of auxiliary sensors, sensors assigned to correct channels, NMEA and Surface PAR selected if applicable.

Problem 2: Deck Unit Completely Inoperable

WARNING!
Use extreme caution when performing these tests.

Cause/Solution 1:
If the power switch is on but the power switch pilot light is out, no other panel lights are on, and the fan is not running, either AC power has been disconnected or the main fuse has blown. Check the AC power source. Turn off the Deck Unit, remove the power cable, wait 1 minute, and check the main fuse. Replace if necessary.
If the main fuse blows again, there is probably a short in the main chassis AC wiring. (Note that the separate fuses and short circuit protection circuitry associated with the internal power supplies will prevent the main fuse blowing, even if internal circuitry is malfunctioning.) See chassis wiring diagram - it may be necessary to disconnect one section after another to locate the problem.

Cause/Solution 2:
If the power switch pilot light comes on and the fan runs, the front panel LEDs should flash on briefly when power is first applied. If they do not, the circuitry that supplies 5 volts to the Deck Unit from the main AC supply may be defective. See *Power Supplies* in *Appendix III: Functional Description and Circuitry*.

Problem 3: Deck Unit Overflow Light on

Data from the CTD is made available to the computer by placing it in the Deck Unit's RAM buffer. The computer then requests the data, emptying the buffer. If the computer is too slow in making these requests, the buffer overflows and the Overflow LED lights. The rate at which the computer requests data from the Deck Unit depends on the other activities it must perform.

Cause/Solution 1:
An older, slow computer may be set to update the SEASAVE display windows too often. To verify that this is the problem and to determine appropriate settings for your computer:

1. Set the Deck Unit thumbwheel switch to 12 [C] (for IEEE-488 interface) or 13 [D] (for RS-232 interface) to display the number of bytes available in the Deck Unit buffer.
2. Start acquisition. The number displayed on the Deck Unit LED should periodically reset to 7000 (IEEE-488) or 14000 (RS-232). If it does not, it will eventually overflow. Stop acquisition.
3. Change the SEASAVE display update rate by right clicking in a display window and selecting Modify. The Display dialog box appears. Enter a larger value for *Seconds between updates* and click OK. Repeat for all display windows. Repeat Step 2 to check for overflow. You may need to repeat Steps 2 and 3 several times, increasing the display update rates each time, to get the system to work.
4. Check if Serial Data Out, Shared File Out, and/or SBE 14 Remote Display are enabled in SEASAVE's Configure Outputs. If enabled, verify that *Seconds between updates* is at least 1 second.
5. If changing the update rate(s) does not eliminate the problem, reduce the rate/amount of data to be saved by the computer by averaging more data scans or suppressing data channels. See *Cause/Solution 2* below.

Cause/Solution 2:
An older, slow computer may not be able to save the data to disk fast enough. Reduce the amount of data it needs to save to disk by doing one of the following:

- Set SEASAVE to average more scans (average of 1 corresponds to 24 Hz data, average of 2 to 12 Hz data, etc.) – In Configure Inputs, modify the .con file on the Instrument Configuration tab to increase *Scans to average*.
- Suppress data channels to reduce the amount of data per scan – In Configure Inputs, modify the .con file on the Instrument Configuration tab to suppress data channels.

Problem 4: CTD Does Not Respond

WARNING!
Use extreme caution when performing these tests.

Cause/Solution 1:
There may be no voltage on the sea cable. Turn off the Deck Unit, remove the power cable, and wait 1 minute. Connect a voltmeter (range set to at least 300 volts DC) to the back-panel *Sea Cable* connector. Reconnect the power cable and turn on the Deck Unit. The voltmeter should read 250V.

If no sea cable voltage is observed, the sea cable supply is inoperative. Turn off the Deck Unit, remove the power cable, and wait 1 minute. Check the back-panel *Sea Cable Fuse*. If this fuse is blown, the sea cable may have been inadvertently shorted, or the CTD may be malfunctioning. Check the resistance across the sea cable and correct if shorted. If the AC input is present, the sea cable supply fuse is OK; if the DC output is missing, the power supply is faulty.

The sea cable supply is built on two parallel aluminum rails placed immediately behind the Deck Unit's main logic board. Check that the 115/230 VAC input is present at the transformer primaries (T1, the large open frame unit at the left rear of the chassis). There should be about 330 VDC across the large blue electrolytic capacitor, C2. If this voltage is present, check the voltage across the 4 K ohm/11 watt bleeder resistor, R1; this should be 250 volts (R1 is mounted to the aluminum rail that runs from side to side on the bottom of the chassis). If the proper voltage exists at R1 and there is still no sea cable voltage at the back panel MS connector, one of the leads to T1 may be broken. If the unregulated voltage at C2 is absent, the bridge rectifier D1 is probably defective.

Problem 5: Data LED Does Not Turn On

Cause/Solution 1:
If the Data LED does not turn on, but the Deck Unit successfully passes data to the computer, the wiring to the light or the light driver, U25, may be broken.

Cause/Solution 2:
If the Data LED does not turn on and the Deck Unit does not pass data to the computer:

1. Check the main internal supply voltages that are present at the turrets located on the Digital PCB. Relative to the GND turret with the black wire, voltages should be +12 at orange, +5 at red, and -12 at blue (all ± 0.5 volts). Voltages outside these ranges can be caused by a fault in the Power-One open-frame supply, or an excessive load on one or more of the supply busses. Disconnect the red, orange, or blue lead to determine whether the problem is in the power supply or on the power bus.
2. If the problem is with the power bus, reconnect the power supply leads. Disconnect the ribbon cable connector at JP1 on the Digital PCB. If the measured voltages are not correct, the problem is with the Receiver PCB. If there is no change, the problem is probably in the Digital PCB logic board. Check for shorted bypass connectors, ICs (a shorted unit may be hot), etc.
3. If the power supply levels are correct, check for correct operation of the Receiver PCB. With the CTD connected, check for presence of the telemetry waveform at the Receiver PCB input terminals, J1. The Receiver PCB is under the main logic PCB, and may be accessed by removing the Deck Unit bottom cover.

Problem 6: RS-232 Interface Not Working

Cause/Solution 1:
You may be attempting to communicate at an incorrect baud rate, etc. A standard Deck Unit is configured to 19200 baud, 8 data bits, 1 stop bit, and no parity. These settings may not be changed. Verify the settings in SEATERM by selecting SBE 11 Interface in the Configure menu.

Cause/Solution 2:
If non-Sea-Bird software is being used, verify that the RS-232 device is sending the correct commands to the Deck Unit. For example, **GR** must be used to begin transferring data to the RS-232 interface.

Cause/Solution 3:
Verify that the connection to main logic board JP6 (RS-232 I/O connector) is properly secured. This connector may be installed 180 degrees to normal position to reverse the Receive/Transmit connections.

Cause/Solution 4:
Check the circuitry associated with U15 and U17.

Problem 7: IEEE-488 Interface Not Working

Cause/Solution 1:
The Deck Unit's IEEE-488 address may not be properly set to match the external interface. As shipped, the Deck Unit address is set to 1, which is the required address for SEASAVE. This is also the default address used by the National Instruments GPIB-PC2A interface as supplied for use in PC/XT/AT computers. If your interface requires a different address, use **GPIB=N** to change the address.

Cause/Solution 2:
If non-Sea-Bird software is being used, verify that the IEEE-488 device is sending the correct commands to the Deck Unit. For example, **GI** must be used to begin transferring data to the IEEE-488 interface.

Cause/Solution 3:
Verify that the ribbon connector JP3 (Digital PCB) is properly mated.

Cause/Solution 4:
Check the circuitry associated with U18.

Problem 8: Tape Recorder Interface Not Working

Cause/Solution 1:
The Deck Unit front panel Signal Source switch may be in the incorrect position. When recording, place the switch in the Fish position. When playing previously recorded data back, place the switch in the Tape position.

Cause/Solution 2:
Verify that the recording level is set properly (approximately 0 db).

Cause/Solution 3:
An incompatible tape type or settings may be used. Use Type II magnetic tape is possible. Verify that the tape recorder bias level and compensation adjustments are as required for the type of tape used.

Cause/Solution 4:
Output to the tape recorder is an 8640 baud DPSK encoded NRZ wave form. Verify that this signal appears at the Deck Unit *Record* connector, with amplitude 0.5 v p-p. If the signal appears at the *Record* connector correctly, then verify that the playback signal appears at the *Play* connector.

Cause/Solution 5:
The 11*plus* V2 may be set up for serial data uplink. An 11*plus* V2 with jumpers set for serial data uplink cannot output data through the tape recorder interface (see *Section 10: Setting Up RS-232 Serial Data Uplink*).

Problem 9: Modem Channel Not Working

The modem channel provides communication between the Deck Unit and a water sampler and/or serial data output instrument connected to the CTD.

Cause/Solution 1:
If the modem Carrier LED does not come on, the Deck Unit modem is not receiving the signal from the CTD modem. Check test point TP2 on the CTD Modem PCB with an oscilloscope; there should be a 1070 Hz sine wave present, with an amplitude of at least 50 mV p-p. The sine wave should change frequency when the CTD modem transmits characters.

Cause/Solution 2:
The CTD modem may not be receiving the signal from the Deck Unit modem. Verify this by putting the Deck Unit thumbwheel switch in position 11 [B]. With the CTD connected (to the Deck Unit), the left-most bit should be 0; if it is 1, the CTD modem is not receiving a signal from the Deck Unit modem. Check test point TP1 on the Deck Unit Modem PCB; there should be a 2225 Hz 4V p-p sine wave present.

Cause/Solution 3:
If both modems are operational (Cause/Solution 1 and 2 ruled out), but the remote instrument (water sampler or serial data instrument) is not operating properly, either the remote instrument or the computer may be cabled improperly. Verify that the Transmit and Receive pins are properly wired (pins 2 and 3 on a standard serial cable).

Cause/Solution 4: (G.O. 1015 Rosette Water Sampler only)
If both modems are operational (Cause/Solution 1 and 2 ruled out), verify that the Rosette Interface PCB is operational. Place a voltmeter across the Rosette cable's positive and negative wires and enable the Rosette; 60 volts should appear on the cable. If it does not, the cable or Rosette Interface PCB may be faulty. Press the Fire button on the Deck Unit; the 60 volt level should rapidly drop to 0. If the voltage on the cable comes up to 60V and drops as expected, the Rosette pylon may be switched to the wrong polarity. Fix this by opening the Rosette pylon and switching the polarity switch to negative. If the Rosette Interface PCB is operational and the pylon is not switched to the wrong polarity, the pylon electronics are faulty.

When the G.O. 1015 Rosette pylon fires a bottle, the supply voltage is forced negative for a moment (a voltmeter placed across the Rosette wires shows the negative pulse.). This negative pulse is sensed by the Rosette interface and a signal is sent to the Deck Unit in the telemetry stream and on the modem channel. Switch the thumbwheel switch to position 11 [B], and fire the Rosette. The bit second from the left should change to 1 for several scans after the Rosette fires. If this does not occur and the Rosette did fire, either the Interface PCB is faulty or the pylon is not sending the confirm signal.

Glossary

DATA HANDLING TERMS

To facilitate data handling, the SBE 9*plus* CTD and SBE 11*plus* V2 Deck Unit cluster individual data bits into groups of various sizes. The following definitions apply in this manual:

- **Byte –** Always 8 bits. May be serial (as generated in the CTD) or parallel (Deck Unit's IEEE-488 output).
- **Character –** Data byte encoded to ASCII standard.
- **Channel –** Path taken by data deriving from a single sensor (for example, a temperature sensor) or other source (such as the modulo counter).
- **LSB –** Least significant bit. Right-most bit in a byte. For example, if the byte is 1111111**0**, the LSB is 0 (in bold).
- **MSB –** Most significant bit. Left-most bit in a byte. For example, if the byte is **1**0000000, the MSB is 1 (in bold).
- **Scan –** One data sample containing temperature, conductivity, pressure, and optional auxiliary inputs (at full rate, obtained 24 times per second with the SBE 911*plus*).
- **Word –** Used to describe a group of data bits subject to certain arithmetic and display operations by the Deck Unit. A word consists of 3 bytes. A word may comprise a single frequency channel, two A/D channels, or other parameters. For example, the Modulo word conveys the modulo count; pump, bottom contact, modem, and water sampler interface status bits; and a 12-bit number representing pressure sensor compensation temperature.
- **Word Number –** The sequential position of a data word in the scan. The word number depends on the order in which the word is presented to the computer or displayed, not on the order in which a particular sensor's data was acquired. The first word in the scan is word number 0.

MISCELLANEOUS

- **PCB –** Printed Circuit Board.

SOFTWARE

- **NMEATest –** Sea-Bird's Win 95/98/NT/2000/XP NMEA message simulation program, which simulates NMEA messages for testing purposes (program is installed with SBE Data Processing).
- **PROG11V2** – Sea-Bird's program to copy calibration coefficients from the instrument configuration (.con) file to the Deck Unit (program is installed with SBE Data Processing).
- **SBE Data Processing –** Sea-Bird's Win 2000/XP data processing software, which calculates and plots temperature, conductivity, pressure, data from auxiliary sensors, and derived variables such as salinity and sound velocity.
- **SEASAVE V7 –** Sea-Bird's Windows 2000/XP software used to acquire, convert, and display real-time or archived raw data.
- **SEASOFT-Win32–** Sea-Bird's complete Windows 2000/XP software package, which includes software for communication, real-time data acquisition, and data analysis and display. SEASOFT-Win32 includes **SEATERM**, **SEASAVE V7**, **SBE Data Processing**.
- **SEATERM –** Sea-Bird's Win 95/98/NT/2000/XP terminal program used to communicate with the SBE 11*plus* V2.

Appendix I: Command Summary

Note:
Except where noted, commands are sent to the Deck Unit through the ***SBE 11 Interface*** connector, using SEATERM.

CATEGORY	COMMAND	DESCRIPTION
General Setup	**DS**	Display status and setup parameters.
	GPIB=x	**x=** IEEE-488 address. Factory default 1. Must be set to 1 to work with SEASAVE.
	AdvanceCn=x	**n=** conductivity channel number (0 or 1); **x=** time (seconds) to advance channel.
	AdvanceVn=x	**n=** A/D channel number (0 -7); **x=** time (seconds) to advance channel (maximum 10).
NMEA	**NMEABaud=x**	**x=** baud rate for communication between Deck Unit and NMEA navigation device (4800 or 9600).
	NSR	Output Lat/Lon/Time ASCII data over RS-232 SBE 11 Interface to terminal program. For diagnostic use in SEATERM.
	NSI	Output Lat/Lon/Time ASCII data over IEEE-488 SBE 11 Interface to terminal program. For diagnostic use in SEATERM.
	Nx (sent automatically by SEASAVE based on .con file setting)	**x=Y:** Add 7 bytes of Lat/Lon data to CTD data. **x=N:** Do not.
Surface PAR	**AddSPAR=x**	**x=Y:** Add Surface PAR voltage data to CTD data. **x=N:** Do not.
	Offset=x	**x=** offset voltage used to adjust Surface PAR data for drift in Deck Unit electronics.
Pressure Frequency & Pressure Temperature	**PBaud=x**	**x=** baud for pressure frequency and pressure temperature output from Deck Unit (1200, 2400, 4800, 9600, or 19200).
Autorun	**AutoRun=x**	**x=N:** Do not automatically start sampling on power up. Default. **x=Y:** On power up, automatically start sampling, and do not send and display response of **DS**.
	AddNMEA=x (only affects operation if **AutoRun=Y**)	**x=Y:** Add Lat/Lon data to CTD data. **x=N:** Do not.

Note:
F = floating point number
S = string with no spaces
N = integer

CATEGORY	COMMAND	DESCRIPTION
Converted Data Output (CDO) - commands sent to Deck Unit through ***Remote Out*** connector, using SEATERM. Note that **TCalDate=** through **AltScale=** are sent automatically when **PROG11v2** is run.	**DS**	Display CDO setup parameters.
	DC	Display calibration coefficients.
	TCalDate=S	**S**=primary temperature calibration date
	CCalDate=S	**S**=primary conductivity calibration date
	PCalDate=S	**S**=pressure calibration date
	TF0=F	**F**=primary temperature F0
	TG=F	**F**=primary temperature G
	TH=F	**F**=primary temperature H
	TI=F	**F**=primary temperature I
	TJ=F	**F**=primary temperature J
	CG=F	**F**=primary conductivity G
	CH=F	**F**=primary conductivity H
	CI=F	**F**=primary conductivity I
	CJ=F	**F**=primary conductivity J
	CPC=F	**F**=primary conductivity pcor
	CTC=F	**F**=primary conductivity tcor
	CS=F	**F**=primary conductivity slope
	PC1=F	**F**=pressure C1
	PC2=F	**F**=pressure C2
	PC3=F	**F**=pressure C3
	PC1=F	**F**=pressure D1
	PT1=F	**F**=pressure T1
	PT2=F	**F**=pressure T2
	PT3=F	**F**=pressure T3
	PT4=F	**F**=pressure T4
	PS=F	**F**=pressure slope
	PO=F	**F**=pressure offset
	PM=F	**F**=pressure M
	PB=F	**F**=pressure B
	AltVolt=N	**N**=CTD A/D voltage number for altimeter
	AltScale=F	**F**=altimeter scale factor
	Format=x	**x**= output format.
	Baud=x	**x**= baud rate for CDO (300, 600, 1200, 2400, 4800, 9600, or 19200). For SBE 14, must be 300. For SBE 46, must be 1200, 2400, 4800, or 9600.
	NAvg=x	**x**= number of scans to average for CDO.
	Lat=x	**x**= latitude (degrees) to use in calculation of depth from pressure.
	Alarms=x	**x**= alarm enable parameter (bottom contact=1, pressure=2, altimeter=4, combination by adding numbers for each alarm to be included).
	PEnable=x	**x**= pressure (decibars) to enable all alarms.
	PSet=x	**x**= pressure (decibars) to turn on pressure alarm.
	AltSet=x	**x**= distance above bottom (meters) to turn on altimeter alarm.
	AltHyst=x	**x**= maximum change in distance above bottom (meters) for altimeter hysteresis.
	Gg or **Run**	Output CDO data to terminal program. For diagnostic use in SEATERM.

Appendix II: Commands Sent Automatically by SEASAVE

The following commands are sent automatically by SEASAVE to configure the Deck Unit at the start of real-time data acquisition. **If you will be developing your own software instead of using SEASAVE, you must send these commands with your software, *in the order listed below*.**

All commands and data sent to the Deck Unit must be sent as ASCII characters. Upon receipt of the commands, the Deck Unit executes the function. All commands remain in effect until the Reset button on the Deck Unit is pushed or new commands are sent.

With the exception of **Axx** (number of scans to average), these settings are not stored in the Deck Unit's EEPROM.

The general format is:
CRL
Where

- C = command
- R = carriage return (not required)
- L = ASCII character for Line Feed (10 decimal or 0A hexadecimal)

Reset Data Buffers Command

R	Reset and flush buffers (does not put data into buffers, leaves all other parameters the same). Any command except **Start Collecting Data** and **Stop Placing Data into Buffers** causes an automatic execution of **Reset Data Buffers**, so that first output data after command will reflect new format.

Unsuppress All Data Words Command

U	Restore all words to data stream. Send once before sending any **Xn** commands.

Number of Scans to Average Command

Axx	**xx=** scans averaged by Deck Unit (1 - 50).

Note:
In SEASAVE, number of scans to average is entered in the configuration (.con) file (*Scans to average*). The Deck Unit sends the appropriate **Axx** command based on the setting in the .con file.

Suppress Data Word Command

Xn

n= suppressed word number (hexadecimal).
Channels can be deleted from data stream transferred to computer with **Xn**.
For frequency channels, a word contains 1 channel; for A/D channels, a word contains 2 channels. Command is useful in reducing scan size, reducing space required to store data.

Note:
If using SEASAVE, suppression of data words and inclusion of NMEA data is entered in the configuration (.con) file. The Deck Unit sends the appropriate **Xn** and **Nx** commands based on the settings in the .con file.

NMEA Command

Nx

x=Y: Add Lat/Lon data to CTD data.
x=N: Do not.

Start Collecting Data Command

Gx

x=I, **R**, or **B**
Signals Deck Unit to begin putting data into its output buffers at a rate determined by how many scans are averaged.
x=I: Put data into IEEE-488 buffer.
x=R: Put data into RS-232C buffer.
x=B: Put data into both buffers.
User's computer obtains this data by exercising appropriate bus protocol.

Stop Placing Data into Buffers Command

S

Deck Unit stops putting data into buffers.
Send **S** when ready to stop sampling.

Appendix III: Functional Description and Circuitry

Deck Unit Data Interfaces

The Deck Unit has both IEEE-488 (parallel) and RS-232C (serial) interfaces. Data output and control commands can be sent via either interface. To successfully transmit full rate (24 Hz) data with all channels active, set the RS-232C interface to 19200 baud or use the parallel interface. With minimum data channels active (4 words) and a reasonably fast computer (i.e., 80386 processor), 24 Hz data acquisition may be accomplished at lower baud rates. Memory buffers at the output ports prevent data loss when the computer is temporarily occupied by other tasks (buffer size = 20500 bytes for IEEE-488, 8000 bytes for RS-232C). The RS-232C interface outputs ASCII characters.

The modem interface provides a bi-directional serial communication link with the CTD that is independent of the telemetry channel. This link may be used to control a water sampler interface or to communicate with a serial device that is cabled to the CTD.

The NMEA 0183 interface permits the Deck Unit to integrate Latitude, Longitude, and Time data into the CTD data stream.

Data Telemetry Receiver

The telemetry waveform originates in the CTD and is transformer-coupled onto the sea cable. In the Deck Unit, another transformer removes the telemetry signal from the sea cable. The signal is amplified, filtered, and converted to logic level prior to being sent to a UART and then to a micro-controller, which checks the decoded bits and activates a valid character line to indicate successful reception of each 8-bit character. The absence of the valid character signal, at times when it is expected, lights the Deck Unit Error LED.

Deck Unit Modem

The Deck Unit modem provides a 300-baud, full-duplex, serial communication link with the CTD. This channel is used by the Deck Unit for water sampler control and control of a remote serial device.

The CTD uses the setting of the most significant bit to determine what to do with a command received from the Deck Unit:

- Characters received by the CTD with the **most significant bit set** (ASCII values 128 - 255) are interpreted as commands to a water sampler. The CTD interprets the command, encodes it in the format required by the water sampler, and sends it to the water sampler.
- Characters received by the CTD with the **most significant bit not set** are passed along unchanged to a remote serial output device.

All characters received by the CTD from the water sampler and remote serial output device are sent to the Deck Unit. Water sampler operation does not interfere with operation of a remote serial output device, and vice versa.

The Deck Unit automatically sends the following commands (as applicable) when the user pushes the Home/Arm and Fire buttons (or fires bottles through SEASAVE).

SBE 32 Carousel Commands and Replies

Commands to Carousel

#**SR**	Go to home position (position #1).
#**SF**	Fire next position (sequential firing).
#**SNx**	Fire position **x** (first position is *1*).

Examples:

#SN2	fire position # 2
#SN<	fire position # 12

Replies

6, !, 6	At home position.
6, #, 6	Received invalid bottle number.
6, -, 6	Did not confirm fire.
6, 49, 6	Fired bottle # 2.
6, 72, 6	Fired bottle # 24.

G.O. 1015 Rosette Commands and Replies

Commands to CTD

#ENBL	Supply power to Rosette.
#FIRE	Remove power from Rosette, fire bottle.

Replies

#ENABLED	Ready to fire bottle.
#CONFIRM	Bottle fire confirm pulse detected.

G.O. 1016 Rosette Commands and Replies

Commands to CTD

#GH	Go to home position
#GOx	Set arm offset to **x**, go to home position.
#GF	Fire position, move to next position.
#GNx	Go to position **x.**

Examples:

#GN2	go to position # 2
#GN:	go to position # 10

Replies

7, Oxf2, 7	Positioning error, returning to home.
7, Oxf4, 7	Positioning error, could not find home.
7, Oxc9, 7	Ready to fire position #1 (home).
7, Oxca, 7	Ready to fire position #2 (home).

Miscellaneous Commands

The following commands apply to a CTD with an optional control line on the Modem PCB. They can be used to control a device, such as the pump, wired to the control line.

Commands to CTD

#P0	Control function off (line logic set low).
#P1	Control function on (line logic set high).

Deck Unit Power

The Deck Unit operates on 105 - 125 VAC or 210 - 250 VAC (50 to 60 Hz), depending on the setting of the back panel power switch. A power supply (Power One model HTAA-16W-A) creates +5, +12, and -12 volts DC for use by the Deck Unit electronics and telemetry receiver. The input power line is fused with at 2 Amp Slow-Blow fuse when operating at 120 VAC. The fuse should be replaced with a 1 Amp Slow-Blow type for use at 240 VAC. The Power One supply has fold-back current limiting, and is not separately fused.

Sea Cable Supply

A choke-input supply provides 250 VDC at up to 0.25 amperes to the sea cable; a 0.5 amp fuse (located on the Deck Unit back panel) protects against accidental shorting or overload of the sea cable.

Deck Unit Cooling

The Deck Unit has a fan in the back panel. Slots at the back panel top and bottom allow air interchange.

Tape Recorder/VCR Interface

Note:
An 11*plus* V2 with jumpers set for serial data uplink cannot output data through the tape recorder interface. See *Section 10: Setting Up RS-232 Serial Data Uplink*.

The tape recorder interface permits use of an audio recorder or VCR for data backup in case of computer failure, or for data recording when no computer is available. Connect the recorder line input and line output to the *Record* and *Play* connectors (respectively) on the Deck Unit. Set the record level to 0 db. When playing back data, the front panel Signal Source switch must be in the Tape position. Most high-quality cassette decks will perform well with this system, although recording time is usually limited to 90-120 minutes due to cassette tape capacity. Best results will be obtained with metal oxide tapes. VCRs with super-long play capability can offer up to 6 hours of recording. Simply use only the audio input and output on the VCR, ignoring the video.

Circuitry

WARNING!
Potentially lethal voltage levels are maintained for 15 seconds after removal of AC power. Turn off the Deck Unit and remove the AC power cord from the back panel before attempting to service the system. Wait at least 1 minute after power down before working on the Deck Unit, sea cable, CTD, etc.

Deck Unit electronics are in a rack-mount cabinet, housing two main PCBs, two modular power supplies, a cooling fan, and front panel displays and back panel connectors. The electronics are powered from 120 or 240 VAC. Set the AC voltage switch (on the Deck Unit back panel) to 120 or 240 before powering the Deck Unit.

Chassis Wiring

The chassis wiring diagram shows the Deck Unit modules and wiring.

Drawing 32233 shows the wiring of the standard Deck Unit. The required AC power input fuse is 2 Amp Slow-Blow when set to 120 VAC units and 1 Amp Slow-Blow when set to 240 VAC. There is also a 0.5 A Fast-Blow fuse in series with the sea cable output for protection against shorts or overloads.

Power Supplies

Power for Deck Unit circuitry is supplied by a conventional open-frame linear supply (Power One Model HTAA-16W-A; Power-One, Inc., Camarillo, California) generating ±12 and +5 volts from the main AC supply, located at the top left front of the chassis. Screwdriver adjustment of the output voltage levels is possible, but not ordinarily required. The Power-One supply uses fold-back current limiting for complete short-circuit protection. Detailed specifications and a schematic diagram are included in this manual.

Sea Cable Supply

The Deck Unit uses a linear supply to produce the sea cable voltage 250 volts at 0.25 amperes (reference drawing 32233). AC power is input to power transformer T1 (primary connections are switched to work on 120 or 240 VAC) to generate approximately 275 V RMS for input to a bridge rectifier (Motorola 100JB12L). The resulting DC voltage is regulated by series inductor L1 and capacitor (Mallory CGS801T450V4L, 800 uF/450 volts) to produce 250-volt output. R1 is a bleeder resistor used to stabilize the supply output voltage and ensure supply discharge within a reasonable (15 second) interval. Output voltage decay time constant is R1*C2 (3.2 seconds).

Receiver PCB

The receiver circuitry (drawing 31326) is installed components-downward on the smaller PCB mounted immediately below the main (microprocessor) PCB. The decoder circuitry is on the same PCB, as is tape recorder interface section.

Transformer T1 provides decoupled 34560 Hz sea cable telemetry signal to a bandpass filter C9/L1 and C11/L2. Transistor pair Q2 and Q3 applies gain, while C13 and T3 produce additional filtering. U1A is a gain stage and Q7/Q8 convert the signal to 5-volt logic level.

Shift-register U3 and X-OR U2C provide the DPSK decoding function (U11and its associated counter circuits provide the bit-clock), with Bessel filter (U4 and associated components) extracting the NRZ data stream. Comparitor U5 converts the NRZ signal to full logic level. The receiver microcontroller, U7, converts the CTD data into frequencies and voltages and transmits the converted data 24 scans per second to the main digital PCB for further processing. The NRZ data stream is fed to U13, where it is encoded to DPSK format for use by analog tape recorders.

Modem PCB

The Modem PCB (drawing 31485) utilizes a Motorola MC145443 300 Baud FSK single chip modem. Transmit frequencies are 2025 and 2225 Hz; receive frequencies are 1070 and 1270 Hz. Transformer T2 on the Receiver PCB couples the modem to the sea cable. U9, U10, and U11 provide filtering for the received signal. U7 and U8 act as a buffer and line driver for the transmitted signal.

U1 is an RS-232 to TTL level converter. U5 is a micro-controller that accepts input from the pushbuttons on the front panel and listens to the traffic on the modem channel. U5 sends commands to the water sampler interface and lights the Home/Arm and Fire LEDs as appropriate.

Digital PCB

The main Digital PCB (drawing 32127):

1. Acquires full rate data from the Receiver PCB.
2. Acquires NMEA navigational data.
3. Digitizes Surface PAR voltage and merges this voltage into the CTD data stream.
4. Time aligns conductivity frequencies and voltages if requested.
5. Averages data if requested.
6. Stores processed data in RAM FIFO buffers for transmission to computer via RS-232 or IEEE-488.
7. Outputs raw pressure data for towed body control.
8. Uses a second microprocessor with EEPROM memory to output converted CTD data in engineering units.

Appendix IV: Replacement Parts

Part Number	Part	Application Description	Quantity
17556	MS3106A-12S-3P 2-pin to pigtail, 10 m (33 ft)	Connects *Sea Cable* on Deck Unit to slip ring	1
171886	DB-25P 25-pin to DB-9S 9-pin serial cable, 3 m (10 ft)	Connects *SBE 11 Interface (RS-232)* and *Modem Channel* on Deck Unit to computer COM ports	2
17082	IEEE-488 cable	Connects *SBE 11 Interface (IEEE-488)* on Deck Unit to parallel port on computer	1
17015	AC power cable (U.S. standard)	Connect Deck Unit to AC power source	1
17824	AC power cord (European plug)	Connect Deck Unit to AC power source	1
80915	MS3106A-12S-3P 2-pin to RMG-2FS 2-pin cable, 10 m (33 ft)	Test cable to connect Deck Unit to CTD	1
801422	MS3106A-12S-3S 2-pin to DB-9S 9-pin NMEA Interface test cable, 1.8 m (6 ft)	Test cable to connect *NMEA* on Deck Unit to computer running NMEA simulation program for test purposes	1
801429	MS3106A-14S-5P 5-pin to DB-9S 9-pin cable, 1.8 m (6 ft)	Test cable to connect *Remote Out* on Deck Unit to computer for Remote Output setup	1
801367	MS3106A-14S-2P 4-pin to Switchcraft EN3C5F 5-pin cable, 15 m (50 ft)	Cable to connect *Surface Par* on Deck Unit to Surface PAR sensor with Switchcraft connector (current connector used by Biospherical Instruments)	1
171890	DB-9P 9-pin to DB-9S 9-pin, 3 m (10 ft)	Cable to connect *9600 Baud Uplink* on Deck Unit to computer	1
801237	MS3106A-14S-5P 5-pin to MS3106F-14S-7S 3-pin, 100 m (328 ft)	Cable to connect *Remote Out* on Deck Unit to SBE 14 Remote Depth Readout	-
171888	DB-25S 25-pin to DB-9P 9-pin cable adapter	For use with computer with DB-25 connector	-
30017	Rack mounting kit	For mounting deck unit	1

Index

.

.con file · 26, 37

9

9600 baud uplink · 14

A

About Sea-Bird · 5
Auxiliary sensors · 15

B

Back panel · 12
Baud rate · 9
Bottle firing · 47, 52, 54

C

Calibration coefficients
  CDO · 39
Carousel · 46, 54
CDO · 39
  calibration coefficients · 39
  commands · 41
  data format · 45
Circuitry · 72
Command summary · 68
Commands · 24
  automatic · 70
  CDO · 41
  NMEA · 29
  pressure frequency and temperature · 38
  SEASAVE · 70
  summary · 68
  Surface PAR · 36
Communications · 9
Configuration file · 26, 37
Converted data output · 39
CTD
  configuration file · 26, 37
CTD data · 13, 24, 31

D

Data acquisition · 52
Data format · 56
  CDO · 45
  Deck Unit LED · 57
  engineering units · 60
  IEEE-488 raw output · 58
  pressure frequency and temperature · 38
  raw output · 58
  RS-232 raw output · 59
  Surface PAR · 37
Data processing · 55
Deck unit
  back panel · 12
  front panel · 10
Deck Unit
  dip switches · 46
Description · 7, 72
Dip switches · 46

E

Editing data files · 55

F

Firing bottles · 47, 52, 54
Front panel · 10
Functional description · 72

G

G.O. 1015 · 46, 54
G.O. 1016 · 46, 54
Glossary · 67

I

Installation · 13

M

Mounting · 13

N

NMEA · 13, 28
  data formats · 34
  message formats · 34
  setup · 30
  simulation program · 32
  testing · 31
  troubleshooting · 32
NMEATest · 8, 16, 32

O

Operating system · 52

P

Parts
  replacement · 77
Power · 15
Pressure frequency and temperature · 38
Processing data · 55
PROG11V2 · 39

R

Real-time data acquisition · 52
Remote output · 14, 38
Replacement parts · 77
Rosette · 46, 54
RS-232 uplink · 14

S

SBE 14 · 39
SBE 32 · 46, 54
SBE 46 · 39
SBE Data Processing · 8, 16, 21, 60
Sea cable · 13
Sea-Bird · 5
SEASAVE · 8, 16, 19, 26, 29, 31, 37, 47, 52, 60, 70
SEASOFT · 8
SEASOFT-Win32 · 16
SEATERM · 8, 16, 17, 23, 24, 29, 30, 36, 38, 40, 41, 68
Serial data output instrument · 49
Setup · 23
  CDO · 40
  general · 23
  general commands · 24
  NMEA · 30
  serial data output instrument · 49
  Surface PAR · 36
Simulation program · 32
Software · 8, 16
  installation · 16
Specifications · 8
Surface PAR · 14, 36
  data format · 37
Surface PAR setup · 36
System communications · 9
System description · 7
System operation · 52
System setup · 23
System wiring · 13

T

Testing
  NMEA · 31
Troubleshooting · 61
  NMEA · 32

U

Unpacking SBE 11plus V2 · 6

W

Water sampler · 13, 15, 46
  dip switches · 46
Wiring · 13

Sea-Bird Electronics, Inc.
1808 136th Place NE
Bellevue, WA 98005
USA

Phone: (425) 643-9866
Fax: (425) 643-9954
E-mail: seabird@seabird.com
Web: www.seabird.com

APPLICATION NOTE NO. 11S **Revised May 2007**

Using Biospherical Surface PAR Light Sensor with SBE 11*plus* Deck Unit

If the SBE 11*plus* Deck Unit is configured with the A/D converter, it can acquire the output of a Surface PAR sensor and integrate this into the CTD data stream. The A/D converter is standard in all V2 Deck Units (serial number 489 and greater) and optional in V1 Deck Units (serial number 488 and lower). This application note applies to the following Surface PAR sensors (the corresponding underwater PAR sensor, mounted on the SBE 9*plus* CTD or cage, is also shown):

Surface PAR Sensor	Corresponding Underwater PAR Sensor	
	If underwater PAR sensor connected directly to CTD A/D voltage channel	If underwater PAR sensor interfacing to PN 90310 Log Amp Module, which is connected to CTD A/D voltage channel
QSR-240 or QSR-2200	QSP-200L or QSP-2300L	QSP-200PD or QSP 2200 (PD)
QCR-240 or QCR-2200	QCP-200L or QCP-2300L	QCP 2200 (PD)

Notes:

- QSR-240, QCR-240, QSP-200L, QSP-200PD, and QCP-200L are no longer in production by Biospherical.
- See Application Note 11 QSP-L for details on the QSP-200L, QCP-200L, QSP-2300L, and QCP-2300L underwater PAR sensors.
- See Application Note 11 QSP-PD for details on the QSP-200PD, QSP-2200 (PD) and QCP-2200 (PD) underwater PAR sensors.

Our SEASOFT-Win32 software fully supports the acquisition and display of the data from these surface reference PAR sensors and the corresponding underwater PAR sensor.

1. SBE 11*plus* CONFIGURATION

A. Configure as follows to add the surface PAR voltage to the CTD data stream (increasing the number of words in the system by 1):
   - **SBE 11*plus* V1**: Set DIP switch S3 position 8 to OFF. The surface PAR voltage will be displayed at thumbwheel position B (or position 11 if your Deck Unit thumbwheel is labeled 0 – 15).
   - **SBE 11*plus* V2**: Refer to the SBE 11*plus* manual (V2) to send the appropriate commands. The surface PAR voltage will be displayed on the Deck Unit LED when the thumbwheel is set to position 9.

B. Plug the cable connected to the surface PAR sensor into the 4-pin MS connector labeled *Surface PAR* on the back of the Deck Unit. A spare 4-pin MS style connector (MS3106A14S-2P) was supplied if a cable was not provided. The surface PAR bulkhead connector on the back panel of the SBE 11*plus* is an MS3102A14S-2S.

Deck Unit	Function	Surface PAR Sensor with Switchcraft Connector
Pin A	Signal (ground)	Pin 3
Pin B	Power (+12 volts)	Pin 4
Pin C	Power (ground) -- Deck Units with Digital PCB Assembly 40937c or greater use Pin C. All previous versions do not use Pin C.	Pin 1
Pin D	Signal	Pin 2
-	-	Pin 5

Note: Biospherical sold the Surface PAR sensor with other connector types in the past. See the appropriate drawing for pinout details if your sensor does not have a Switchcraft connector.

C. To convert to actual voltage, divide the number displayed on the Deck Unit LED by 819:
Voltage = displayed number / 819.

2. SOFTWARE CONFIGURATION

Set up the configuration (.con) file for the SBE 9*plus* CTD. Enable the recording of the surface PAR sensor by selecting *Surface PAR voltage added*. This alters the display by adding two additional external voltages. The highest numbered voltage is labeled **SPAR/surface irradiance**. Enter the surface light **conversion factor** and the **ratio multiplier** in the .con file.

Note: In our SEASOFT-Win32 suite of programs, edit the CTD configuration (.con) file using the Configure Inputs menu in SEASAVE V7 (real-time data acquisition software) or the Configure menu in SBE Data Processing (data processing software).

SEASOFT calculates surface light as:

surface light (µEinsteins/m^2•sec) = volts * conversion factor

To compute the **conversion factor**, calculate the output of the surface PAR sensor in µEinsteins/m^2•sec/volt using the data from the Surface PAR calibration sheet that was provided by Biospherical (located in the CTD manual).

Conversion factor = Output in Air / Probe Net Response

For example, if Probe Net Response = 85.6 mV (0.0856 volts) and Output in Air = 0.01384 µEinsteins/cm^2•sec:
Conversion factor = (0.01384 µEinsteins/cm^2•sec) * (10000 cm^2/m^2) / 0.0856 volts = 1617 µEinsteins/m^2•sec/volt

SEASOFT calculates corrected PAR as:

corrected PAR = 100 * ratio multiplier * underwater light / surface light
(underwater light is the calculated light output from the underwater sensor)

To compare the *shape* of data sets taken at disparate light levels, the **ratio multiplier** can be used to *scale* the data. For example, a ratio multiplier of 10 would make a 100 µEinsteins/m^2•sec light level plot as 1000 µEinsteins/ m^2•sec. **The ratio multiplier should be set to 1 for normal operations.**

Notes:

- **Do not enter the Calibration factor from the Biospherical calibration sheet as the Conversion factor in SEASOFT.**
- To output Surface PAR in units other than µEinsteins/m^2•sec, multiply the calculated Conversion factor to obtain the desired units. See Application Note 11General to convert units.
- See Application Note 11 QSP-L or 11 QSP-PD, as applicable, for instructions on entering the underwater PAR sensor coefficients.

Sea-Bird Electronics, Inc.
1808 136th Place NE
Bellevue, WA 98005
USA

Phone: (425) 643-9866
Fax: (425) 643-9954
E-mail: seabird@seabird.com
Web: www.seabird.com

APPLICATION NOTE NO. 68 Revised **November 2006**

Using USB Ports to Communicate with Sea-Bird Instruments

Most Sea-Bird instruments use the RS-232 protocol for transmitting setup commands to the instrument and receiving data from the instrument. However, many newer PCs and laptop computers have USB port(s) instead of RS-232 serial port(s).

USB serial adapters are available commercially. These adapters plug into the USB port, and allow one or more serial devices to be connected through the adapter. Sea-Bird tested USB serial adapters from three manufacturers on desktop computers at Sea-Bird, and verified compatibility with our instruments. These manufacturers and the tested adapters are:

- **IOGEAR** (www.iogear.com) –
  USB 1.1 to Serial Converter Cable (model # GUC232A).
  Note: This adapter can also be purchased from Sea-Bird, as Sea-Bird part # 20163.

- **Keyspan** (www.keyspan.com) -
  USB 4-Port Serial Adapter (part # USA-49WLC, replacing part # USA-49W)

- **Edgeport** (www.ionetworks.com) -
  Standard Serial Converter Edgeport/2 (part # 301-1000-02)

Other USB adapters from these manufacturers, and adapters from other manufacturers, **may** also be compatible with Sea-Bird instruments.

We have one report from a customer that he could not communicate with his instrument using a notebook computer and the Keyspan adapter listed above. He was able to successfully communicate with the instrument using an XH8290 DSE Serial USB Adapter (www.dse.co.nz).

We recommend testing any adapters, *including those listed above*, with the instrument and the computer you will use it with before deployment, to verify that there is no problem.

DRAWINGS

Dwg 31922 SBE 11plus Block Diagram..... 1

Dwg 32233C SBE 11plus Chassis Wiring..... 2

Dwg 40853 SBE 11plus Front Panel Assembly..... 3

Dwg 41000a SBE 11plus Back Panel Assembly..... 4

Dwg 41001a SBE 11plus Chassis Panel Assembly..... 5

Dwg 32126D SBE 11plus Deck Unit Receiver Schematic..... 6

Dwg 40934D SBE 11plus Deck Unit Receiver Assembly..... 9

Dwg 32127d SBE 11plus Deck Unit Digital Board Schematic..... 11

Dwg 40937D SBE 11plus Deck Unit Digital Board Assembly..... 15

Dwg 30146 SBE 11plus Deck Unit Front Panel LED Schematic..... 17

Dwg 40424C SBE 11plus Deck Unit Front Panel LED Assembly..... 18

Dwg 31485D SBE 11plus Deck Unit Multi-Rosette Modem Board Schematic..... 19

Dwg 40628D SBE 11plus Deck Unit Multi-Rosette Modem Board Assembly..... 20

Dwg 31314B SBE 11plus Deck Unit Signal Input Cable Assembly, PN 80591..... 21

Dwg 32695B SBE 11plus Deck Unit Signal Input Cable Assembly, SUBCONN, 22

Dwg 32786B GPS/NMEA Interface Test Cable Assembly, PN 801422..... 23

Dwg 32799A SBE 11plus Deck Unit CDO Test Cable, PN 801429..... 24

Dwg 31475a Surface PAR Cable Wiring - Bendix Connector..... 25

Dwg 32434B Surface PAR Cable Wiring - Lemo Connector..... 26

Dwg 32704 Surface PAR Cable Wiring - SwitchCraft Connector..... 27

Dwg 32784A Cable, RS-232, DB-25P to DB-9S, PN 801419..... 28

Dwg 32798 Cable, RS-232 Serial Uplink, DB-9S to DB-9P, PN 801428..... 29

Dwg 32739 Cable, RS-232 Adapter, DB-25P to DB-9S, PN 17130..... 30

DATE	SYM	REVISION RECORD	AUTH	DR	CK

INPUT VOLTAGE 115/230 VAC
LINE FILTER
AC VOLTAGE SELECTOR SWITCH
POWER TRANSFORMER
275 VRMS
SEA CABLE SUPPLY
250Vdc
115 VAC
COOLING FAN
DC POWER SUPPLY
+5V
+12V
-12V

SEACABLE TO/FROM 9plus

TELEMETRY DECOUPLING TRANSFORMER
MODEM COUPLING TRANSFORMER

34560HZ SEACABLE TELEMETRY

'FISH/TAPE' SELECT: FRONT PANEL SWITCH
'RUN/DIAGNOSTIC' SELECT: RECEIVER 'S2' TOGGLE SWITCH

BANDPASS FILTER (C9/L1, C11/L2)
GAIN (Q2, Q3)
FILTERING (C13, T3)
FISH
TAPE
GAIN (U1A)
5V LOGIC LEVEL CONVERSION (Q7, Q8)
DPSK DECODER
AMPLIFIER & LOGIC LEVEL CONVERSION
RUN
DIAG
UART
NRZ DATA
DPSK ENCODER
DPSK DATA
TAPE RECORDER INPUT
(RECORD)
MICRO-PROCESSOR

RECEIVER BOARD

TAPE RECORDER OUTPUT
(PLAYBACK)

MICROPROCESSOR BOARD

MICRO-PROCESSOR (8085)
AD(0...7)
OCTAL LATCHES (SERIAL TO PARALLEL DATA CONVERSION)
DATA
DECODER (MEMORY SELECT)
RAM
FLOATING POINT PROCESSOR
DECODER
A(0...15)
EPROM
OCTAL TRANCEIVERS
DIP SWITCHES
ONE-SHOT & BUFFERING
ADDRESS DEMULTIPLEXER
OCTAL LATCH
FRONT PANEL (OUTPUT) BOTTOM CONTACT ALARM
FRONT PANEL LEDs
LED DRIVER
UART
RS-232 LEVEL CONVERSION
RS-232 IN/OUT
FRONT PANEL LED NUMERIC DISPLAY
GPIB CONTROLLER
GPIB TRANCEIVER
GPIB IN/OUT (IEEE-488)

RS-232 IN/OUT
RS-232 LEVEL CONVERSION
MODEM
MICRO-CONTROLLER
(optional)
MODEM BOARD

WATER SAMPLER CONTROL & STATUS (FRONT PANEL)

SEA-BIRD ELECTRONICS, INC.		
Title: SBE 11plus DECK UNIT : BLOCK DIAGRAM		
Size: B	Document Number: 31922	REV
Date: May 13, 1996	Sheet 1 of 1	

DATE	SYM	REVISION RECORD	AUTH	DR	CK
08/16/99	A	CHG DIGITAL BD JP11 WIRE COLOR		DG	
06/14/00	B	ECN662: 10210C, ADD SPAR GND		DG	
11/25/02	C	9600BPS WAS OPTIONAL	CB	DG	
10/04/04	-	CORRECTION: DIGITAL BD. JP1 WAS JP2		DG	

BACK PANEL
LINE CONNECTOR (17016)
FUSE HOLDER (20001)
115VAC = 2 ASB (20046)
230VAC = 1 ASB (20045)
VAC IN
L RED
E GRN
N BLK
SB FUSE
BACK SIDE
LINE FILTER
20076
CORCOM 3VR1
FRONT PANEL
AC POWER SWITCH
19013/19010
230 V NEON
RED
AML32FBC7AD
BACK PANEL
115/230
20077
6ESS2T
T1 20067
241-8-2640
RED 1
ORG 2
WHT 4
BLK 5
10
8 YEL
6 YEL
100JB12L
13066
D1
C1
4700pF
14114
BLK
ORG
20021
241-8-120
L1
2
6
4
10 BLK
C2
800uF
14044
R1
4K
15273
R2 15
15276
BACK PANEL
BACK
SIDE
0.5 AMP
FB FUSE
20042
FUSE HOLDER 20001
COOLING FAN
20018
TORIN TA300S
BLK
RED
GRN
PRIMARY POWER SUPPLY
22002
GND +5V -12V GND +12V
POWER-ONE
HTAA-16W-A
4
2
3
1
RED
BLK
MS 2 PIN
17519
B
A
SEACABLE
ORG
WHT
BLK
(optional)
SUBCARRIER MODEM
P/N 80673
ASSY 40628E
SCHEM 31485D
PCB 10109B
J3
SERIAL
I/O
17056
3
2
1
GRN #24
ORG #24
BLK #24
MODEM IN
DB-25s
17001/17007
J1
RECEIVER
J2
WATER SAMPLER
1 2 3 4 5 6
1 2 3 4 5 6 7 8 9 10
17071
FRONT PANEL
SONALERT
SC628MN
ALARM
20033
BUZZ
1
2
BACK PANEL
IEEE-488
17023
17008
JP3
RED
BLU
BLK
ORG
RED
BLK
+5
-12
GND
+12
ALARM+
ALARM-
17054
JP10
1
2
WHT#24
RED#24
FRONT PANEL
NMEA
GRN
LED
20002
17054
JP8
GRN#24
ORG#24
BACK PANEL
GPS INPUT
MS 2 PIN
17415
17065
JP2
REMOTE
DISPLAY
BLK#24
GRY#24
YEL#24
ORG#24
A
B
C
D
E
REMOTE
OUTPUT
MS 5 PIN
17670
17056
JP7
REMOTE
PRESSURE
BLK#24
PPL#24
ORG#24
SIG-
+12V
GND
SIG+
BLK#24
ORG#24
GRN#24
YEL#24
SURFACE
PAR
MS 4 PIN
17416
17056
JP6
RS-232
GRN#24
BLK#24
ORG#24
RS-232
DB-25s
17001
17007
(optional) 80687 CABLE
BLK #24
GRN #24
WHT #24
BLU #24
RED #24
ORG #24
ORG
WHT
1 2 3 4 5 6
JP5
MODEM
JP1
SEACABLE
17331
JP1
9600 BPS
RS-232
DB-9S
17096
5
3
2
GRN#24
ORG#24
JP7
17054
RECEIVER, V2
P/N 40934A
ASSY 40934A
SCHEM 32126A
PCB 10208
JP3
TAPE I/O
17065
4
3
2
1
JP4
JP2
FISH/TAPE
17054
2 1
FRONT PANEL
WHT #24
BRN #24
ORG
20083
G.O.
BLK #24
ORG
20083
SBE
BLU #24
S3 YEL
19037
19039
HOME/ARM
ORG #24
S4 GRN
19037
19038
FIRE
GRN #24
YEL
20003
HOME/ARM
RED #24
GRN
20002
FIRE
YEL #24
GRN
20002
CARRIER
RECORD
80635
PLAYBACK
80635
BACK PANEL
JP11
17067
1 2 3 4 5 6
JP9
RED#24
WHT#24
ERROR
BRN#24
OVERFLOW
YEL#24
DATA
GRN#24
RECEIVE
ORG#24
TRANSMIT
RED
LED
20004
RED
LED
20004
GRN
LED
20002
GRN
LED
20002
YEL
LED
20003
RESET
WHT#24
BLU
19007/19012
WHT#24
17550
NUMERIC DISPLAY
SCHEMATIC 30146
ASSEMBLY 40424B
P/N 80040A
1 WHT #24
2 WHT #24
4 WHT #24
B WHT #24
C WHT #24
WORD SELECT
THUMBWHEEL
19006
CHERRY
T65-13A1
FISH 1
2
YEL #24
3
TAPE
BLU
19008/19011
YEL #24
FRONT PANEL
DIGITAL BOARD, V2
P/N 40937C
ASSY 40937C
SCHEM 32127C
PCB 10210C

1. ALL WIRE #20 TEFLON COATED UNLESS OTHERWISE SPECIFIED
2. TWIST ALL WIRE PAIRS

SEA-BIRD ELECTRONICS, INC.

FRONT PANEL ASSY 40853
BACK PANEL ASSY 41000A
CHASSIS ASSY 41001A

Title: SBE 11plus V2 DECK UNIT CHASSIS WIRING

Size: B | Document Number: 32233 | Rev: C

Date: Monday, October 04, 2004 | Sheet 1 of 1

DATE	SYM	REVISION RECORD	AUTH.	DR.	CK.

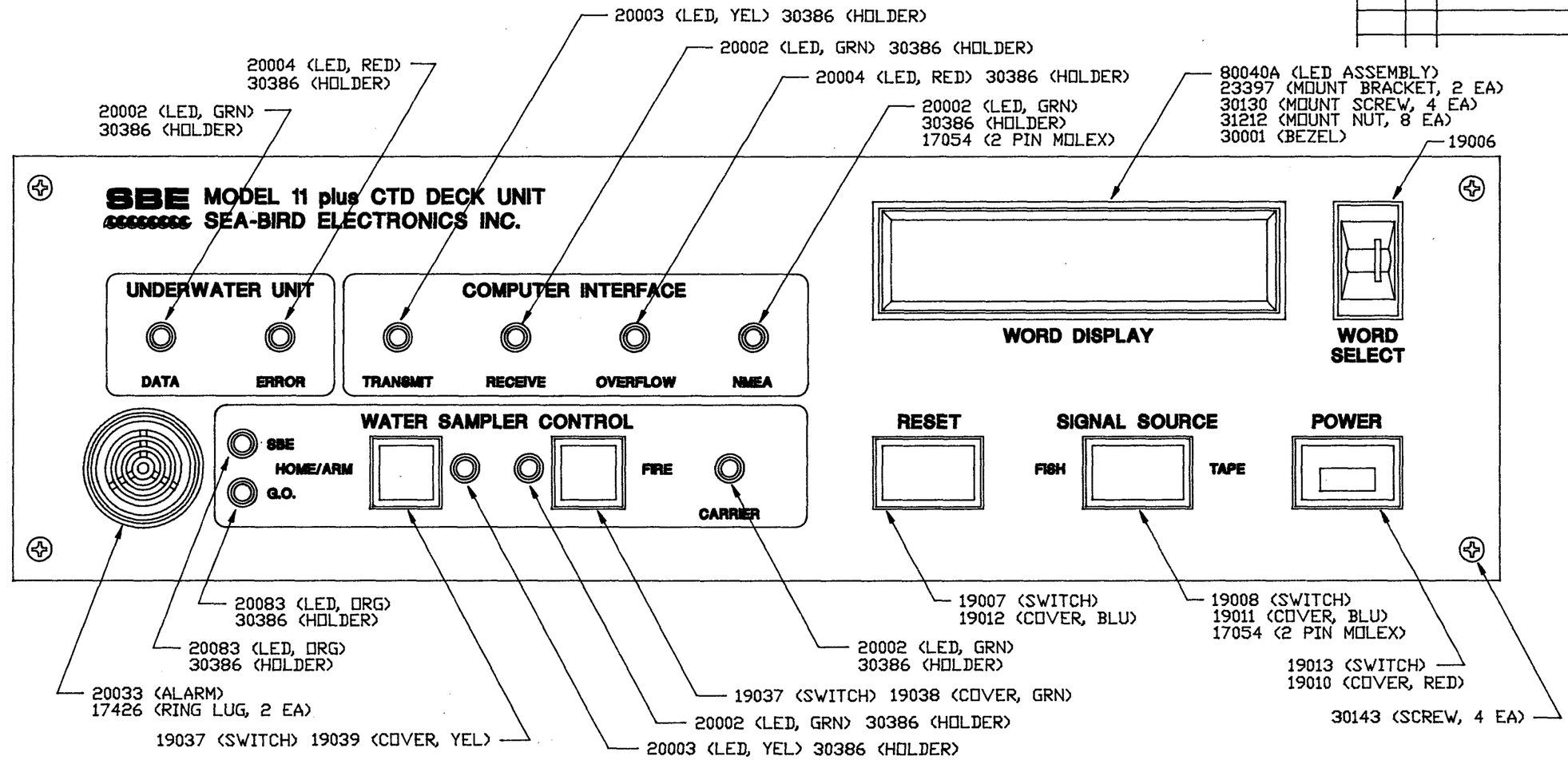

SBE 11plus CTD Deck Unit : Front Panel Assembly, 40853

SBE P/N	Quant	Description	Description/Location
17052	18	Pin, Gold, Molex 2759-08-56-0110	crimped to wire ends for molex connectors
17054	2	Socket, 2 Pin, Molex 2695-22-01-2027	wire ends of NMEA LED, wire ends of tape/fish switch
17067	1	Socket, 6 Pin, Molex	wire ends of LEDs (data,error,transmit,receive,overflow)
17071	1	Socket, 10 Pin, Molex, 2695-22-01-2107	wire ends of water sampler switches and LEDs
17426	2	Terminal Ring Lug, #6	wire ends from Sonalert alarm
19006	1	Sw, Hex Thumb, Cherry T65-13A1	word select switch
19007	1	Sw, Spdt, Mom, (Reset), AML21EBA2AA	reset switch
19008	1	Switch, (Tape/Fish), AML24EBA2BA01	tape/fish switch
19010	1	Sw, Red Actuator, AML52N10R	power switch cover
19011	1	Sw, Blue Rocker, AML54F10B	tape/fish switch cover
19012	1	Sw, Blue Cover, AML51F10B	reset switch cover
19013	1	Sw, (230v Pwr), AML32FBC7AD	power switch
19037	2	Sw, Mom P/B Micro-Sw AML21HBA2BA	home/arm, fire
19038	1	Sw, Green Button, Micro-Sw AML51C10G	fire switch cover
19039	1	Sw, Amber Button, Micro-Sw AML51C10A	home/arm switch cover
20002	5	LED, Green, HP HLMP-3507	fire, data, carrier, receive, NMEA
20003	2	LED, Yellow, HP HLMP-3401	home/arm, transmit
20004	2	LED, Red, HP HLMP-3301	error, overflow
20033	1	Sonalert, Mallory SC628MN	in front panel (2 pieces)
20083	2	LED, Orange HP HLMP-D401	SBE, G.O.

SBE P/N	Quant	Description	Description/Location
23397	2	Deck Unit LED Mount, dwg 20405	secured to deck unit LED assembly
23905C	1	11plus Front Panel, w/Sono&Gps, 20902	front panel
30001	1	4" BezelR w/Red Filter, RMF P/N 140-4	word display (2 pieces) in front of LED assy
30130	4	Mach Screw, 4-40 x 5/8 FH, SS	connects LED assembly to LED mounts
30141	4	Mach Screw, 6-32 x 3/8 FH, SS	connects front panel to case (corner) brackets and sides
30143	4	Mach Screw, 6-32 x 3/8 Oval H, SS	connects front panel to case (corner) brackets
30212	8	Nut, 4-40 Nylon Stop, SS, (Thin)	use with LED display screws
30386	11	LED Holder, HLMP-0103	holds LEDs in front panel (two pieces)
80040A	1	11plus Deck Unit LED Assy	word display

TOLERANCES	SEA-BIRD ELECTRONICS, INC			
FRACTIONAL	P/N SCH 31732	SCALE 3 : 4	DRAWN BY DG	
			APPROVED BY	
DECIMAL	TITLE SBE 11plus FRONT PANEL ASSEMBLY			
ANGULAR	DATE 11/22/96	DRAWING NUMBER 40853		REV

OR16.

DATE	SYM	REVISION RECORD	AUTH.	DR.	CK.
11/25/02	A	9600 BPS WAS OPTIONAL	CB	DG	

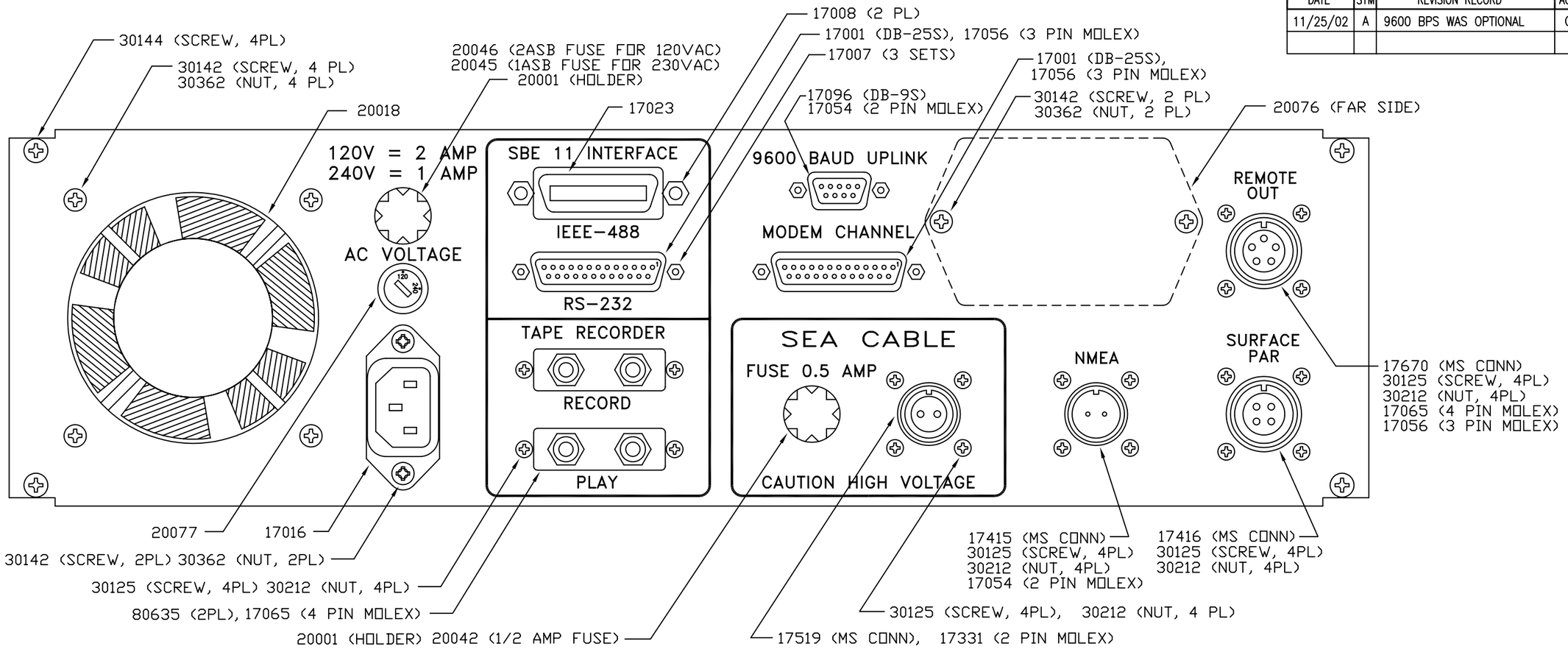

SBE 11plus CTD Deck Unit : Back Panel Assembly, 41000a

SBEPN	Quant	Description	Description/Location
17001	2	Conn, DB-25S, 25 Pin Female	RS-232, modem
17007	3	Conn, Jack Post Set, Amp 205817-1	use with DB-25 and DB-9 connectors
17008	2	Conn, Jack Post, GPIB Amp 553636-2	use with GPIB connector/cable
17016	1	Conn, 110VAC Bulkhead, Switchcraft EAC-309	Line connector
17023	1	Cable, GPIB, Ansley A-05428	IEEE-488
17052	19	Pin, Gold, Molex 2759-08-56-0110	Crimped onto wire ends for molex connectors
17054	2	Socket, 2 Pin, Molex 2695-22-01-2027	wire ends of NMEA and 9600 baud connectors
17056	3	Socket, 3 Pin, Molex 2695-22-01-2037	wire ends of DB-25S and Remote connectors
17065	2	Socket, 4 Pin, Molex, 2695-22-01-2047	wire ends of tape recorder record/play & Remote
17096	1	Conn, DB-9s, 9 pin female	9600 baud uplink
17331	1	Socket, 2 Pin, Molex, 2139-09-50-3021	wire ends of sea cable connector
17332	2	Terminal, Crimp, Molex, 2478-08-56-0106	Crimped to wire ends of sea cable connector
17415	1	Conn, MS3102A12S-3P, 2 Pin, Male Pnl Mnt	NMEA
17416	1	Conn, MS3102A14S-2S, 4 Pin, Female Pnl Mnt	Surface PAR
17519	1	Conn, MS3102A12S-3S, 2 Pin, Female Pnl Mnt	Sea cable
17670	1	Conn, MS3102A14S-5S, 5 Pin, Female Pnl Mnt	Remote Out
20001	2	Fuse Holder, Littlefuse 342004A	back panel 'amp' ports (3 pieces each holder)
20018	1	Fan, (Deck Unit) A30716-10/TA300S	
20042	3	Fuse, 3AG-1/2 A, Fast Blow, 312.500	Sea cable fuse (with 2 spares)
20046	3	Fuse, 3AG-2 A, Slow Blow	Main fuse for 115VAC operation (with 2 spares)
20045	3	Fuse, 3AG-1 A, Slow Blow, 313001	(optional) Main fuse for 230VAC operation (2 spares)
20076	1	Corcom Line Filter, 3VR1	inside surface of back panel
20077	1	Schurter, Voltage Selector 033.4503	AC voltage (2 pieces)

SBEPN	Quant	Description	Description/Location
23512.1C	1	11plus Back Panel, Screened, Dwg 20561.1a	
30125	20	Mach Screw, 4-40 x 3/8 PH, SS	connectors: audio, sea cable, SPAR, NMEA, Remote
30142	8	Mach Screw, 6-32 x 3/8 PH, SS	fan, line filter, line connector
30144	4	Mach Screw, 6-32 x 7/16 Truss HD	connects back panel to case corner brackets & sides
30212	20	Nut, 4-40 Nylon Stop, SS, (Thin)	connectors: audio, sea cable, SPAR, NMEA, Remote
30362	10	Nut, 6-32 Nylon Stop (Thin), SS	power supply, fan, line filter, line connector
30470	1	SBE Label, Serial Number, #468 Adhesive	Attach to back panel
30471	1	SBE Label, Blank Serial Number Inserts	Attach to back panel
80635	2	SBE 11plus Audio Jack Assembly	tape recorder record/play

SEA-BIRD ELECTRONICS, INC			
PART NO. 41000A	PNL SCALE 0.75	DRWN BY DG	
SCHEM 32233C	PL SCALE 1.10	APPR BY	
TITLE SBE 11plus, V2 BACK PANEL ASSEMBLY			
DATE 10/20/98	DWG NO. 41000	REV A	

DATE	SYM	REVISION RECORD	AUTH.	DR.	CK.
1/00	A	ECN654: XFMR MNT PLATE		DG	

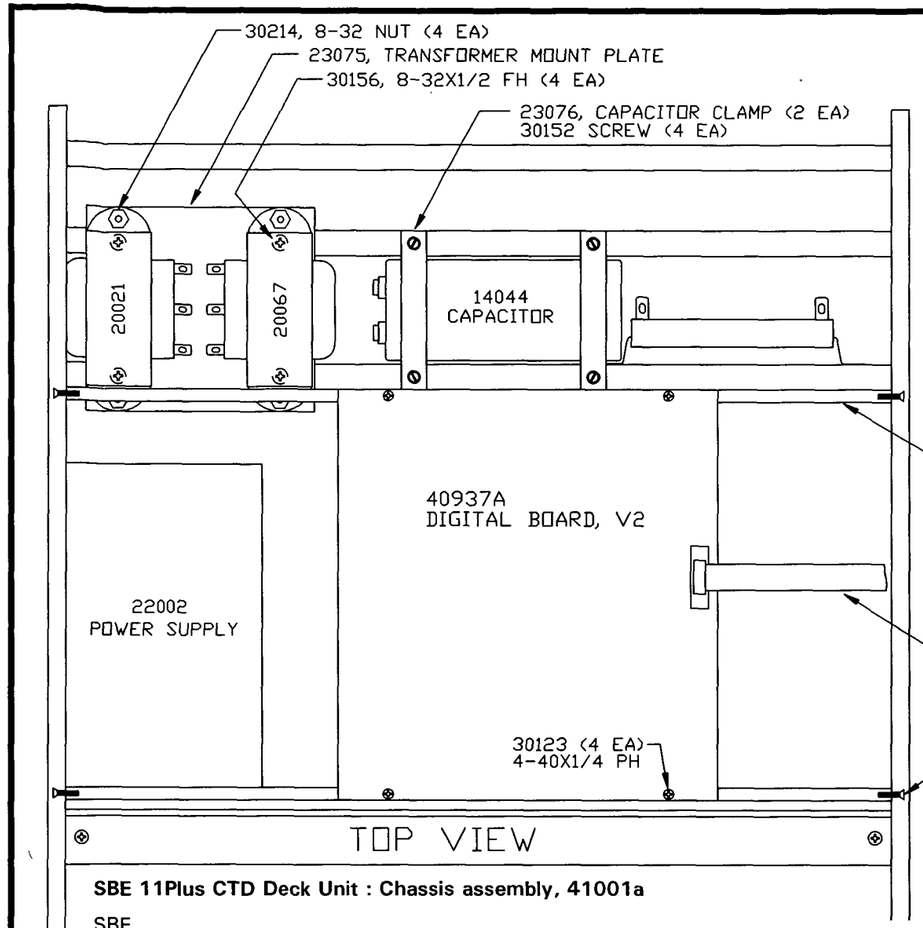

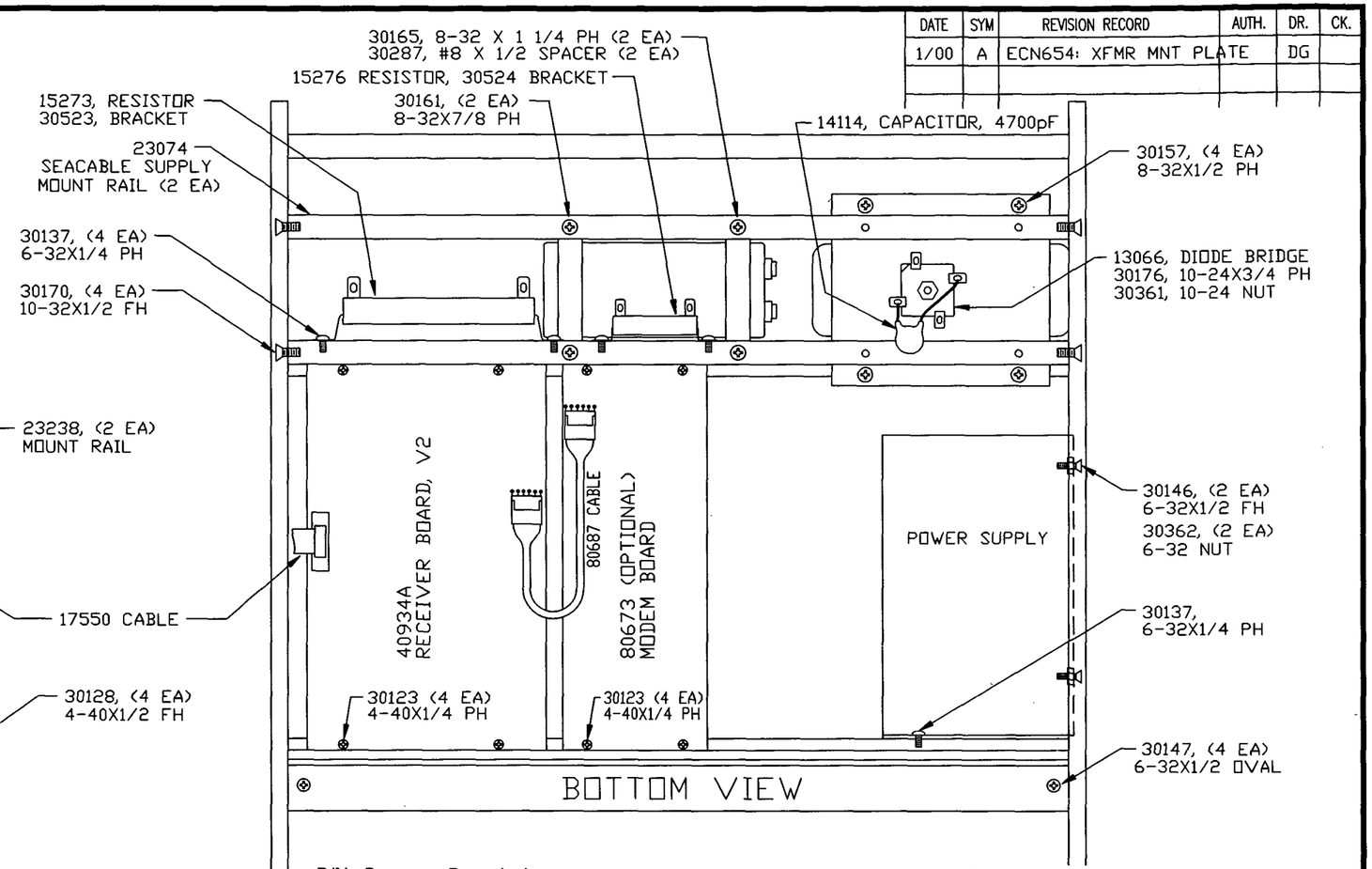

SBE 11Plus CTD Deck Unit : Chassis assembly, 41001a

SBE P/N	Quant	Description	Description/Location
Case Assembly:			
23238	2	Deck Unit Internal Support Bar/ 20264F	Connects to case side pieces
30016	1	Deck Unit Case, TDJ/ B-525-15-1700H, Blue	Case assembly (8 pieces)
30128	4	Mach Screw, 4-40 x 1/2 FH, SS	Secures support rails to case side pieces
30144	8	Mach Screw, 6-32 x 7/16 Truss HD.	Connects top and bottom covers to case brackets
30147	4	Mach Screw, 6-32 x 1/2 Oval HD, SS	Connects case rails to case brackets
Sea-cable Supply Assembly:			
13066	1	Diode Bridge, IR 100JB10L	Secure to bottom of transformer plate
14044	1	Cap, 800 uf, 450v Al Elect, CGS801T450V4L	Mount in clamps
14114	1	Cap, 4700 pf, Roderstein WKO472MCPEJOK	Attached to diode bridge
15273	1	Res, 4 K Ohm 50 Watt, Ohmite L50J4KO	Mount to deck supply rail
15276	1	Res, 15 Ohm, 12 Watt, L12J15R	Mount to deck supply rail
20021	1	Transformer, (HPDS), Signal 241-8-120	Mount on Transformer plate
20067	1	Transformer, Signal 241-8-2640, DP241-8-315	Mount on Transformer plate
23074	2	Hi-Pwr Deck Sply, Rail, /Dwg.20086	Connects to case side pieces
23075	1	Hi-Pwr Deck Sply, Plate, /Dwg.20087	Secured to deck supply rail
23076	2	Hi-Pwr Deck Sply, Clamp, /Dwg.20088	Holds 800uF 450v capacitor
30137	4	Mach Screw, 6-32 x 1/4 PH, SS	Secures resistors to deck supply rail
30152	4	Mach Screw, 6-32 x 1 Fill HD, Slot SS	Secures capacitor clamp halves together
30156	4	Mach Screw, 8-32 x 1/2 FH, SS	Secures transformer plate to deck supply rails
30157	4	Mach Screw, 8-32 x 1/2 PH, SS	Secures transformers to deck supply plate
30161	2	Mach Screw, 8-32 x 7/8 PH, SS	Secures capacitor clamp to deck supply rails
30165	2	Mach Screw, 8-32 x 1-1/4 PH, SS	Secures capacitor clamp to deck supply rails
30170	4	Mach Screw, 10-32 x 1/2 FH, SS	Secures deck supply rails to case side pieces
30176	1	Mach Screw, 10-24 x 3/4 PH, SS	Secures diode bridge to deck supply plate
30214	4	Nut, 8-32 Nylon Stop, SS	Used with transformer screws
30287	2	Spacer, #8 x 1/2", Nyl, RSN-8/8	Used with capacitor clamp securing screws
30361	1	Nut, 10-24 Nylon Stop, SS	Used with diode bridge screw
30523	2	Res, Bracket, #9 Ohmite	Connects to 4k 50 watt resistor
30524	2	Res, Bracket, #5 Ohmite	Connects to 15 ohm 12 watt resistor

P/N	Quant	Description	Description/Location
Power Supply Assembly:			
22002	1	Pwr Sply, Power One HTAA-16W-A	Secured to case side piece
30137	1	Mach Screw, 6-32 x 1/4 PH, SS	Secures power supply to internal support rail
30146	2	Mach Screw, 6-32 x 1/2 FH, SS	Secures power supply to case side piece
30362	2	Nut, 6-32 Nylon Stop, SS	Used with power supply screws to case side
Digital PCB Assembly:			
30123	4	Mach Screw, 4-40 x 1/4 PH, SS	Secures Digital board to support rails
40937a	1	SBE 11plus Digital board, V2 /Dwg 40937a	Electronic PCB
Receiver PCB Assembly:			
17550	1	Cable, Rcvr, Ansley 10 Pin/10 Pin, 9"	Connects Receiver board to Digital board
30123	4	Mach Screw, 4-40 x 1/4 PH, SS	Secures Receiver electronic PCB to support rails
40934a	1	SBE 11plus Receiver board, V2 /Dwg 40934a	Electronic PCB
Modem PCB Assembly **(optional)**:			
30123	4	Mach Screw, 4-40 x 1/4 PH, SS	Secures Modem board to support rails
80673	1	11plus Modem, Multi-Rosette, Dwg 40628e	Electronic PCB
80687	1	Cable Assy, 6" Modem To Rcvr, 31512	Connects Modem board to Receiver board

TOLERANCES	SEA-BIRD ELECTRONICS, INC		
FRACTIONAL	P/N SCH 32233	SCALE 1 : 3	DRAWN BY DG APPROVED BY
DECIMAL	TITLE SBE 11plus, V2 CHASSIS ASSEMBLY		
ANGULAR	DATE 10/20/98	DRAWING NUMBER 41001	REV A

QA16.

DATE	SYM	REVISION RECORD	AUTH	DR	CK
07/20/98	A	ECN561: SWAP U5 PINS 2&3	DJM		
11/17/98	B	ADD U7S, U7 WAS 11167		DG	
11/23/98	C	ECN596: PCB A, SWAP U5 PINS 2&3		DG	
06/11/04	D	ECN790: CHANGE SBEPN FOR C9,C11		DG	

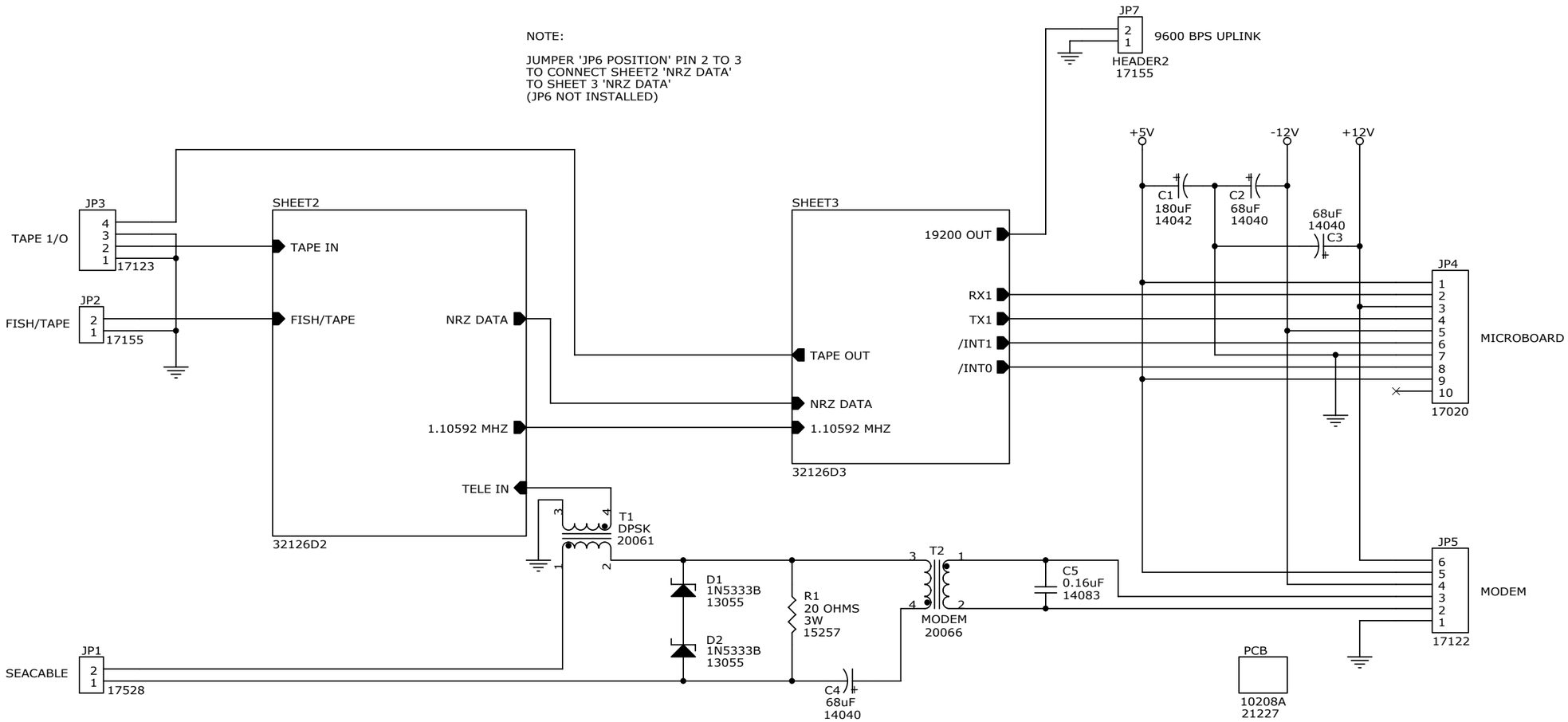

SEA-BIRD ELECTRONICS, INC.		
ASSEMBLY 40934D		
Title: SBE 11+ RECEIVER BOARD, VERSION 2		
Size: B	Document Number: 32126	Rev: D
Date: Friday, June 11, 2004	Sheet 1 of 3	

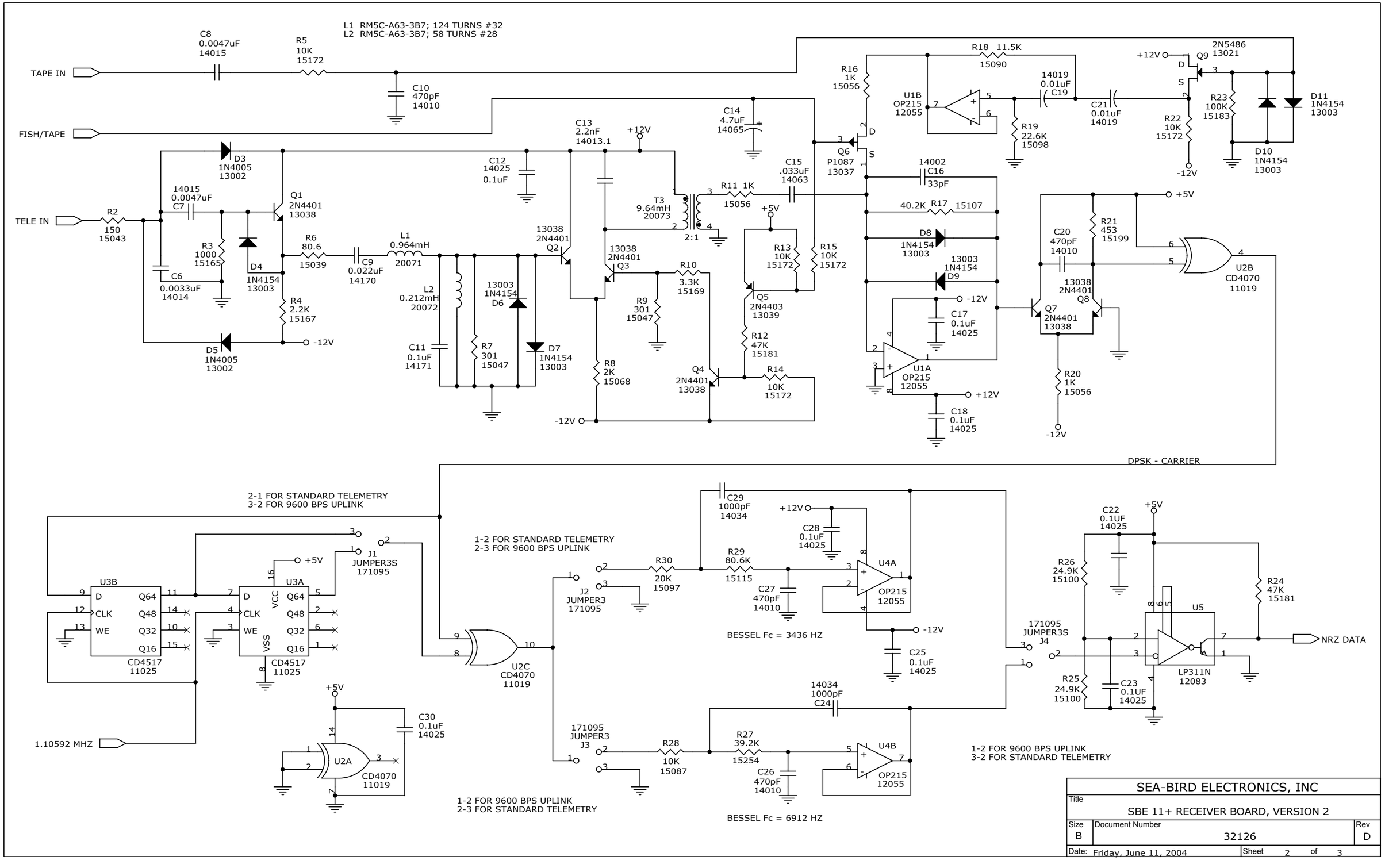

SEA-BIRD ELECTRONICS, INC		
Title: SBE 11+ RECEIVER BOARD, VERSION 2		
Size: B	Document Number: 32126	Rev: D
Date: Friday, June 11, 2004	Sheet 2 of 3	

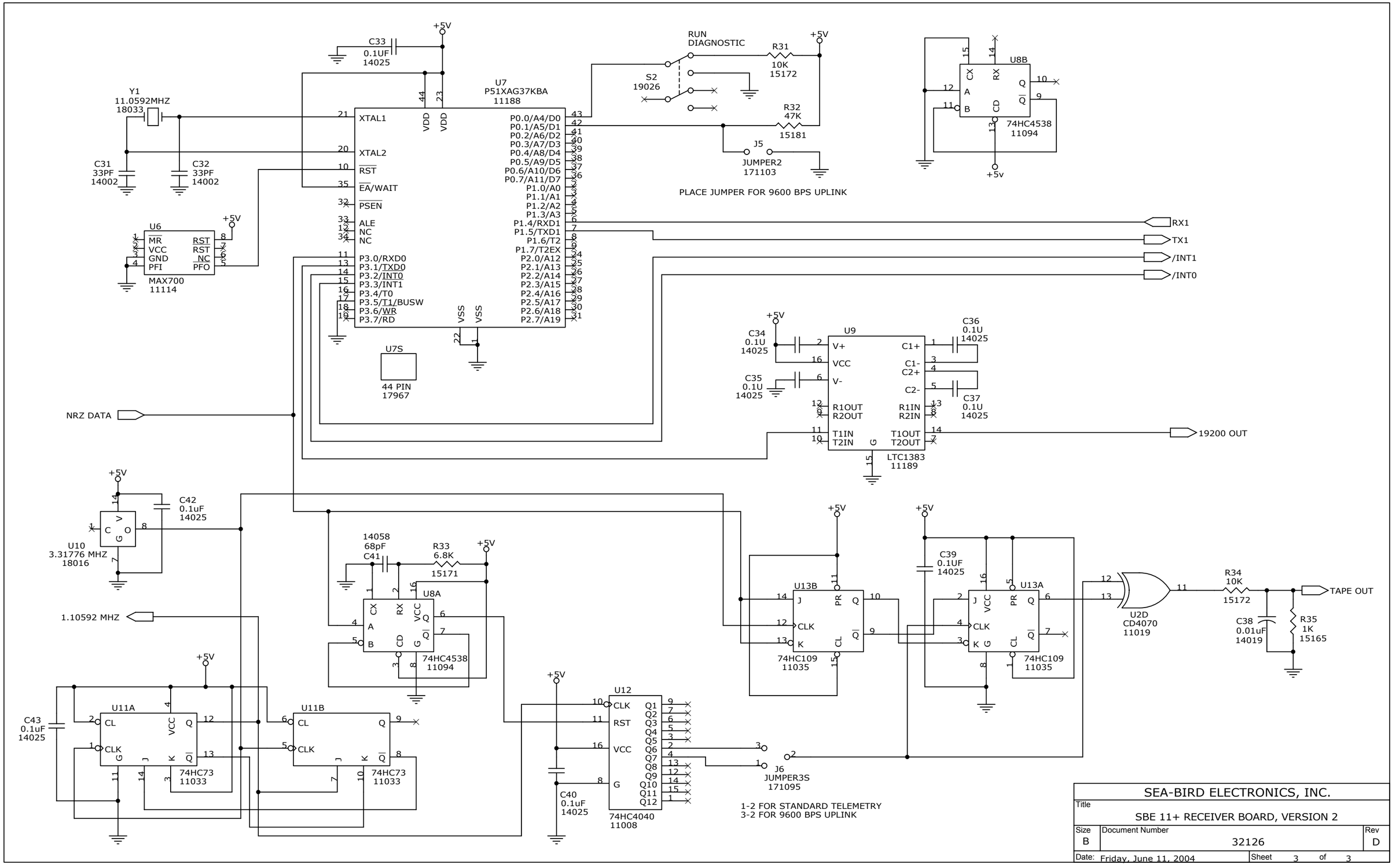

SEA-BIRD ELECTRONICS, INC.		
Title: SBE 11+ RECEIVER BOARD, VERSION 2		
Size: B	Document Number: 32126	Rev: D
Date: Friday, June 11, 2004	Sheet 3 of 3	

SLB PRINTED ON 09:38:58 14 JUN 2004

PART NUMBER..	DESCRIPTION.....	QPA.....	REF DESIG.....
40934D	SBE11+ RECEIVER BOARD V2 /DWG 40934D		
10208A	PCB, SBE11plus RECEIVER /DWG 10208A	1.0000	
11008	IC, 74HC4040N, HC RIPPLE CTR.	1.0000	U12
11019	IC, MC14070BCP, MOTOROLA	1.0000	U2
11025	IC, CD4517BE/MC14517BCP, SHIFT REG.	1.0000	U3
11033	IC, 74HC73N, FLIP FLOP	1.0000	U11
11035	IC, 74HC109N	1.0000	U13
11094	IC, MC74HC4538AN DUAL SINGLE SHOT	1.0000	U8
11114	IC, MAXIM, MAX700CPA	1.0000	U6
11188	IC, P51XAG37KBA OTP 30MHZ CMRCL TEMP PLCC	1.0000	U7
11189	IC, LTC1383CN RS232 INTRFC, LINEAR TECH	1.0000	U9
12055	IC, OP249AZ OP AMP ANALOG DEVICE	2.0000	U1 U4
12083	IC, LP311P, COMPARATOR, TI	1.0000	U5
13002	DIODE, 1N4005, HI-VOLTAGE	2.0000	D5 D3
13003	DIODE, 1N4154, UNITRODE	7.0000	D4 D6 D7 D8 D9 D10 D11
13021	FET, 2N5486, MOTOROLA, NOT TESTED	1.0000	Q9
13037	FET, P1087, SILICONIX	1.0000	Q6
13038	XISTOR, 2N4401	6.0000	Q1 Q2 Q3 Q4 Q7 Q8
13039	XISTOR, 2N4403	1.0000	Q5
13055	ZENER DIODE, 3.3V 5W 1N5333B, MOTOROLA	2.0000	D1 D2
14002	CAP, 33 pf, 100V CER, SR151A330KAA, NPO	3.0000	C16 C31 C32
14010	CAP, 470 pf, 100V CER, SR151A471JAA, NPO AVX	4.0000	C10 C20 C26 C27
14013.1	CAP, .0022 +/- .000044 uF, POLYESTER	1.0000	C13
14014	CAP, .0033 uf, 100V CER, CK05BX332K, X7R	1.0000	C6
14015	CAP, .0047uf, 80V POLY, 192P472X9080	2.0000	C7 C8
14019	CAP, .01 uf, 80V POLYESTER, 192P1039R8	3.0000	C19 C21 C38
14025	CAP, .1uf, 100V 10% X7R SR211C104KAA, AVX	17.0000	C12 C17 C18 C22 C23 C25 C28 C30 C33 C34 C35 C36 C37 C39 C40 C42 C43
14034	CAP, .001 uf, 200V CER, C322C102J2G5CA, NPO	2.0000	C24 C29
14040	CAP, 68 uf, 15V TANT, CSR13D686KP	3.0000	C2 C3 C4
14042	CAP, 180 uf, 6V TANT, 550D187X9006R2	1.0000	C1
14058	CAP, 68 pf, 200V CER, SR212A680JAA, NPO	1.0000	C41
14063	CAP, .033 uf, 50V CER, CK05BX333K, X7R	1.0000	C15
14065	CAP, 4.7 uf, 25V DIPPED TANT, T350C475K025AS	1.0000	C14
14083	CAP, .16uF, 100V 5%, METLZD POLYCRBNTE,32MPC	1.0000	C5
14170	CAP, .022 uf 50V 2% POLYCARB 650B1A223G	1.0000	C9
14171	CAP, .1 uf 50V 2% POLYCARB 650B1A104G	1.0000	C11
15039	RES, 80.6 OHM, 1%, 1/4 W	1.0000	R6
15043	RES, 150 OHM, 1%, 1/4 W	1.0000	R2
15047	RES, 301 OHM, 1%, 1/4 W	2.0000	R7 R9
15056	RES, 1K OHM, 1%, 1/4 W	3.0000	R11 R16 R20
15068	RES, 2.0K OHM, 1%, 1/4 W	1.0000	R8
15087	RES, RN55C1002F, 10K 1% 1/4W, DALE	1.0000	R28
15090	RES, 11.5K OHM, 1%, 1/4 W	1.0000	R18
15097	RES, 20K OHM, 1%, 1/4 W	1.0000	R30
15098	RES, 22.6K OHM, 1%, 1/4 W	1.0000	R19
15100	RES, 24.9K OHM, 1% 1/4W DALE RN55C2492F	2.0000	R25 R26
15107	RES, RN55C4022F, 40.2K OHM 1% 1/4W, DALE	1.0000	R17
15115	RES, 80.6K OHM, 1%, 1/4 W	1.0000	R29
15165	RES, 1K OHM, 5%, 1/4 W	2.0000	R3 R35
15167	RES, 2.2K OHM, 5%, 1/4 W	1.0000	R4
15169	RES, 3.3K OHM, 5%, 1/4 W	1.0000	R10
15171	RES, 6.8K OHM, 5%, 1/4 W	1.0000	R33
15172	RES, 10K OHM, 5%, 1/4 W	7.0000	R5 R13 R14 R15 R22 R31 R34
15181	RES, 47K OHM, 5%, 1/4 W	3.0000	R12 R24 R32
15183	RES, 100K OHM, 5%, 1/4 W	1.0000	R23
15199	RES, RN55C4530F, 453 OHM 1% 1/4W, DALE	1.0000	R21
15254	RES, RN55C3922F, 39.2K OHM 1% 1/4W	1.0000	R27
15257	RES, 20 OHM, 3 WATT, 5%, OHMITE 23J20R	1.0000	R1
17020	CONN, 10 PIN, ANSLEY 609-1027ES	1.0000	JP4
171095	HEADER, 3 PIN SAMTEC, TSW-103-07-L-S	5.0000	J1 J2 J3 J4 J6
171103	HEADER, 2 PIN SAMTEC, TSW-102-07-L-S	1.0000	J5
17122	HEADER, 6 PIN RIGHT ANGLE MOLEX 22-12-2064 RA	1.0000	JP5
17123	HEADER, 4 PIN RIGHT ANGLE MOLEX, 22-12-2044	1.0000	JP3
17155	HEADER, 2 PIN R< MOLEX 22-12-2024 RA	2.0000	JP2 JP7
17528	HEADER, 2 PIN, MOLEX, 26-48-2026	1.0000	JP1
17967	SOCKET, 44 PIN AUGAT PLCC, PCS-044A-1	1.0000	U7S
18016	OSC, CH1100-3.31776 MHZ .01% TOLERANCE	1.0000	U10
18033	CRYSTAL, FOX 11.0592MHZ FOX115-20	1.0000	Y1
19026	SW, ALCO TT21NG-RA-1	1.0000	S2
20061	SBE 9 SEACABLE TELEMETRY XFMR, /DWG 40503	1.0000	T1
20066	MODEM COUPLING XFMR /DWG 40506B	1.0000	T2
20071	SBE 11+ RCVR L1, 0.964 mHy, /DWG 40534B	1.0000	L1
20072	SBE 11+ RCVR L2, 0.212 mHy, /DWG 40535B	1.0000	L2
20073	SBE 11+ RCVR T1, /DWG 40536A	1.0000	T3
30918	JUMPER, SNT-100-BK-G	6.0000	

***

DATE	SYM	REVISION RECORD	AUTH.	DR.	CK.
7/22/98	A	ECN561: SWAP U5 PINS 2&3	DJM	DG	
11/17/98	B	ADD U7s, CHANGE U7		DG	
12/18/98	C	ECN596: PCB REV A		DG	
6/14/04	D	ECN790: CHANGE C9,C11		DG	

SEA-BIRD ELECTRONICS, INC

PART NO. 40934D	BD SCALE 1.50	DRWN BY DG	
SCHEM 32126D	PL SCALE 1.00	APPR BY	
TITLE: SBE 11plus RECEIVER BOARD, V2			
DATE 4/10/98	DWG NO. SH 1 OF 2 40934	REV D	

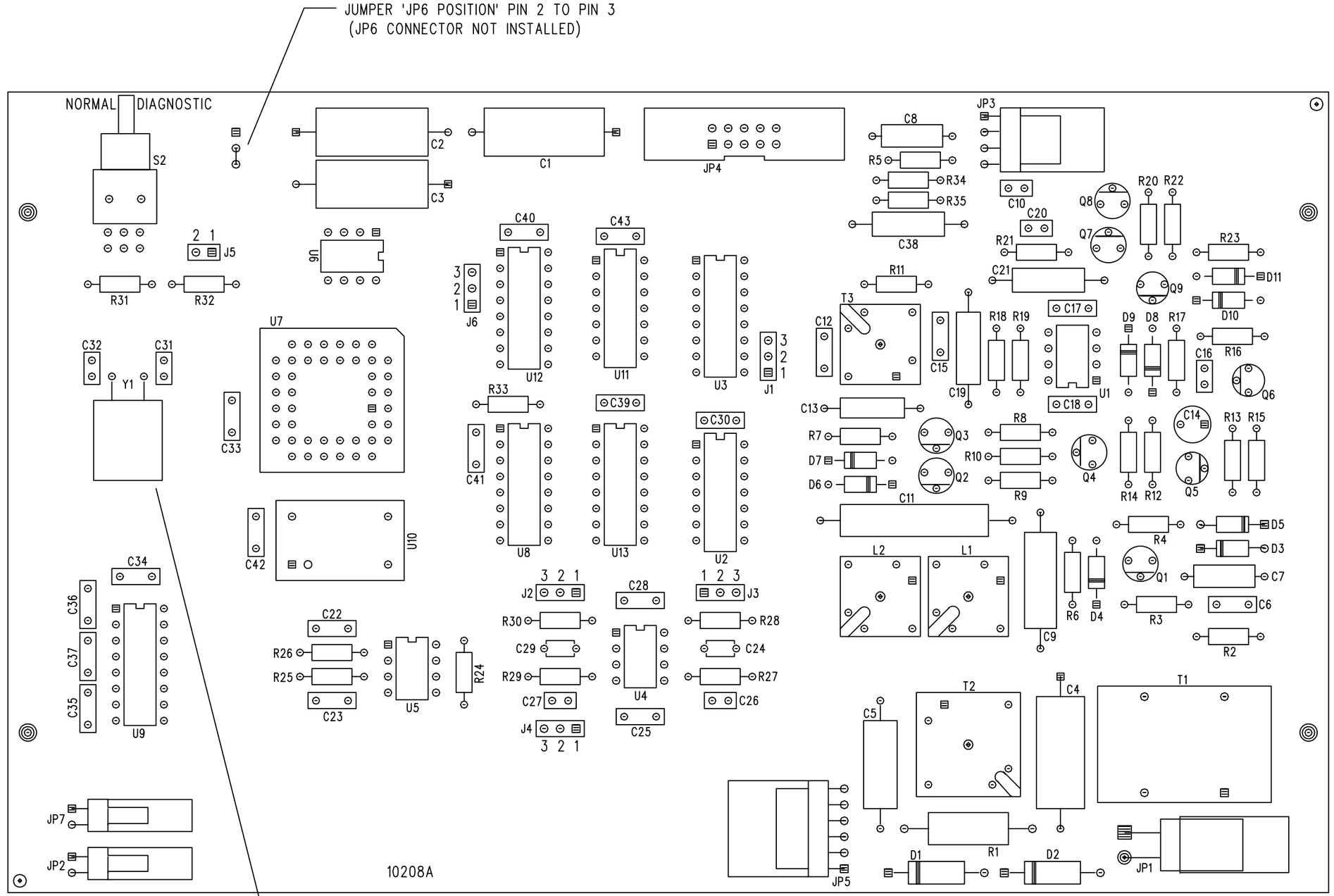

10208A TOP LAYER

40934C

STANDARD TELEMETRY		9600 BPS UPLINK	
J1	SHORT 1-2	J1	SHORT 2-3
J2	SHORT 1-2	J2	SHORT 2-3
J3	SHORT 2-3	J3	SHORT 1-2
J4	SHORT 2-3	J4	SHORT 1-2
J5	OPEN	J5	SHORT
J6	SHORT 1-2	J6	SHORT 2-3

DWG NO.	REV
SH 2 OF 2 40934	D

DATE	SYM	REVISION RECORD	AUTH	DR	CK
06/25/98	A	ECN553: PCB REV A	JB	JB/DG	
06/17/99	B	ECN632: PCB B, U22 WAS SMT	DJM	DG	
05/25/00	C	ECN662: PCB C, SPAR DIFF	JB	DG	
04/27/05	D	ECN841: PCB D, CHANGE U2,U6,U16	JB	DG	

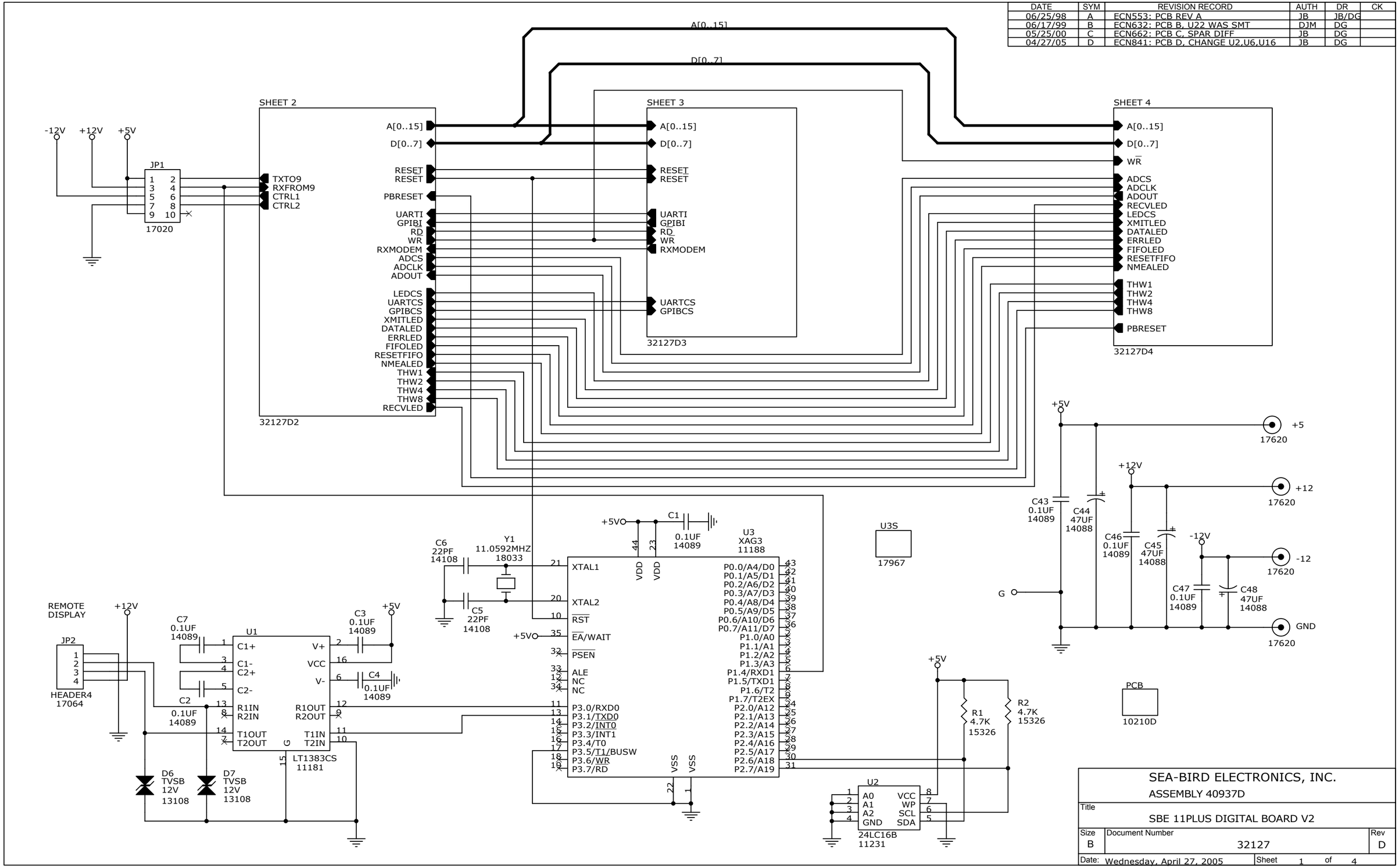

SEA-BIRD ELECTRONICS, INC.

ASSEMBLY 40937D

Title: SBE 11PLUS DIGITAL BOARD V2

Size	Document Number	Rev
B	32127	D

Date: Wednesday, April 27, 2005 Sheet 1 of 4

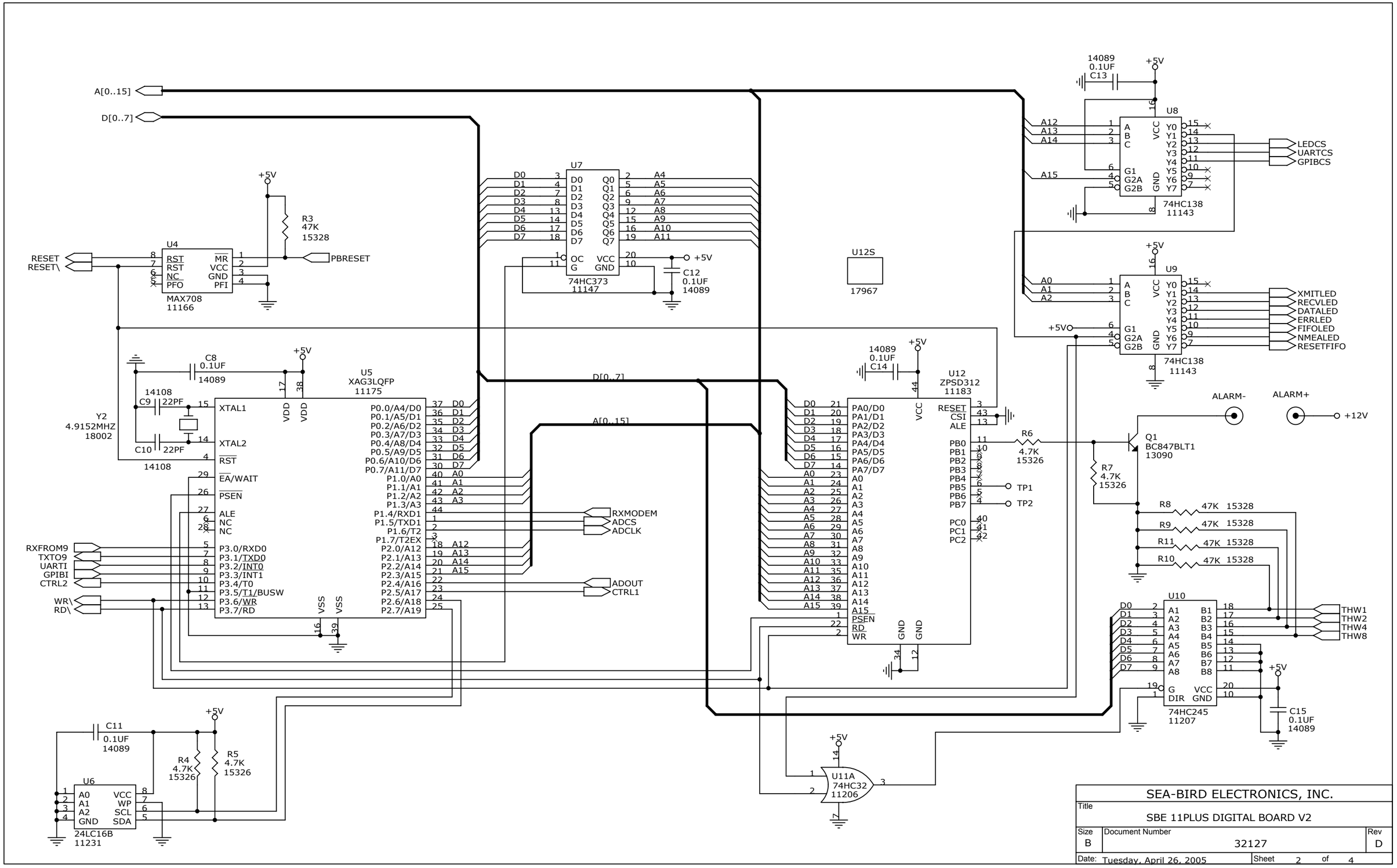

SEA-BIRD ELECTRONICS, INC.		
Title: SBE 11PLUS DIGITAL BOARD V2		
Size: B	Document Number: 32127	Rev: D
Date: Tuesday, April 26, 2005	Sheet 2 of 4	

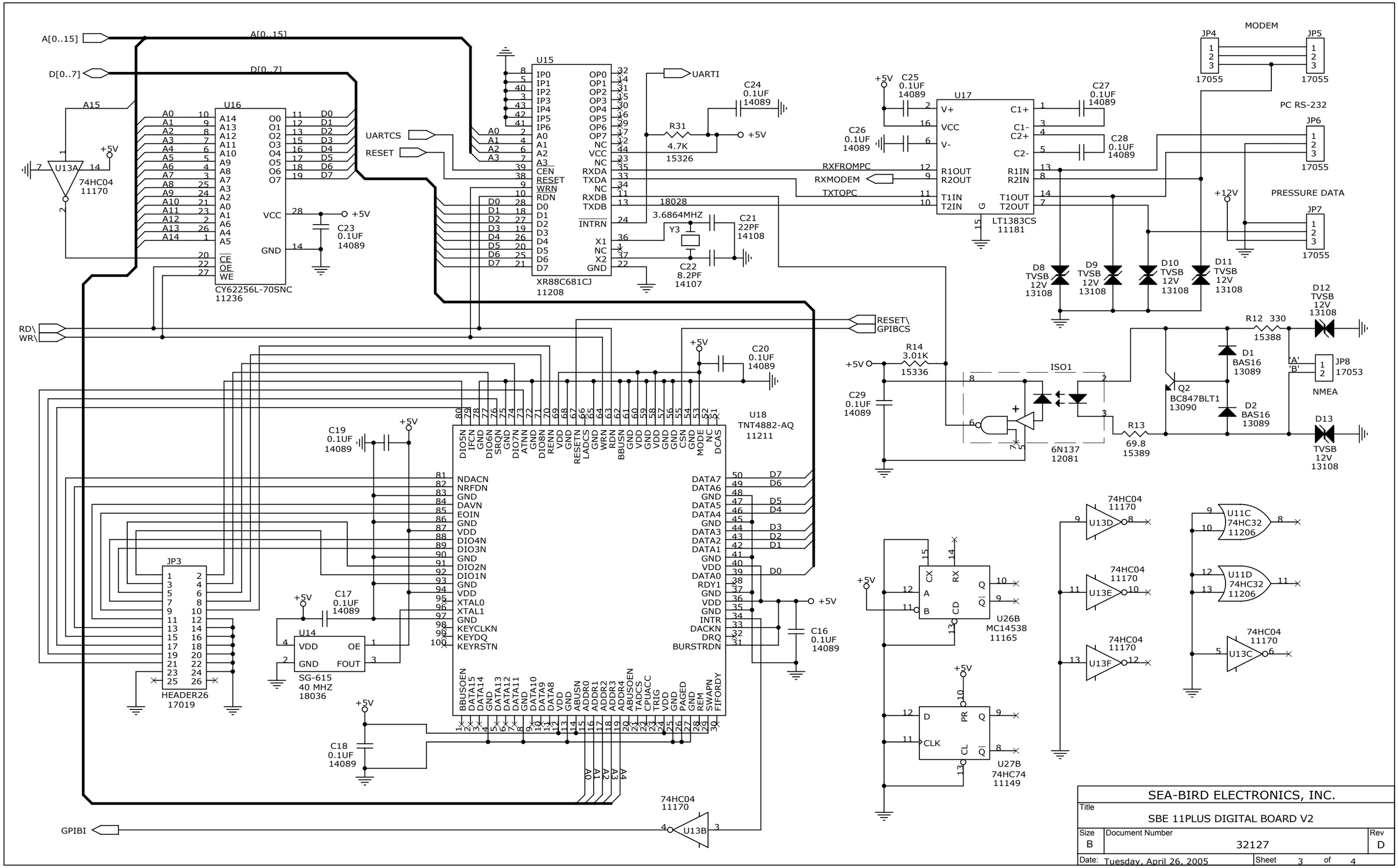
A[0..15]
D[0..7]
A15
U13A
74HC04
11170
U16
CY62256L-70SNC
11236
UARTCS
RESET
U15
XR88C681CJ
11208
UARTI
C24 0.1UF 14089
R31 4.7K 15326
C23 0.1UF 14089
3.6864MHZ
Y3
C21 22PF 14108
C22 8.2PF 14107
18028
U17
LT1383CS
11181
C25 0.1UF 14089
C26 0.1UF 14089
C27 0.1UF 14089
C28 0.1UF 14089
RXFROMPC
RXMODEM
TXTOPC
MODEM
JP4
JP5
17055
PC RS-232
JP6
PRESSURE DATA
JP7
+12V
D8 TVSB 12V 13108
D9 TVSB 12V 13108
D10 TVSB 12V 13108
D11 TVSB 12V 13108
D12 TVSB 12V 13108
D13 TVSB 12V 13108
RD\
WR\
RESET\
GPIBCS
C20 0.1UF 14089
U18
TNT4882-AQ
11211
C19 0.1UF 14089
C18 0.1UF 14089
R14 3.01K 15336
C29 0.1UF 14089
ISO1
6N137
12081
R12 330 15388
R13 69.8 15389
D1 BAS16 13089
D2 BAS16 13089
Q2 BC847BLT1 13090
JP8 17053
NMEA
JP3
HEADER26
17019
U14
SG-615
40 MHZ
18036
C17 0.1UF 14089
C16 0.1UF 14089
U26B
MC14538
11165
U27B
74HC74
11149
U11C 74HC32 11206
U11D 74HC32 11206
U13C
U13D
U13E
U13F
GPIBI
U13B
SEA-BIRD ELECTRONICS, INC.
Title
SBE 11PLUS DIGITAL BOARD V2
Size B
Document Number 32127
Rev D
Date: Tuesday, April 26, 2005
Sheet 3 of 4

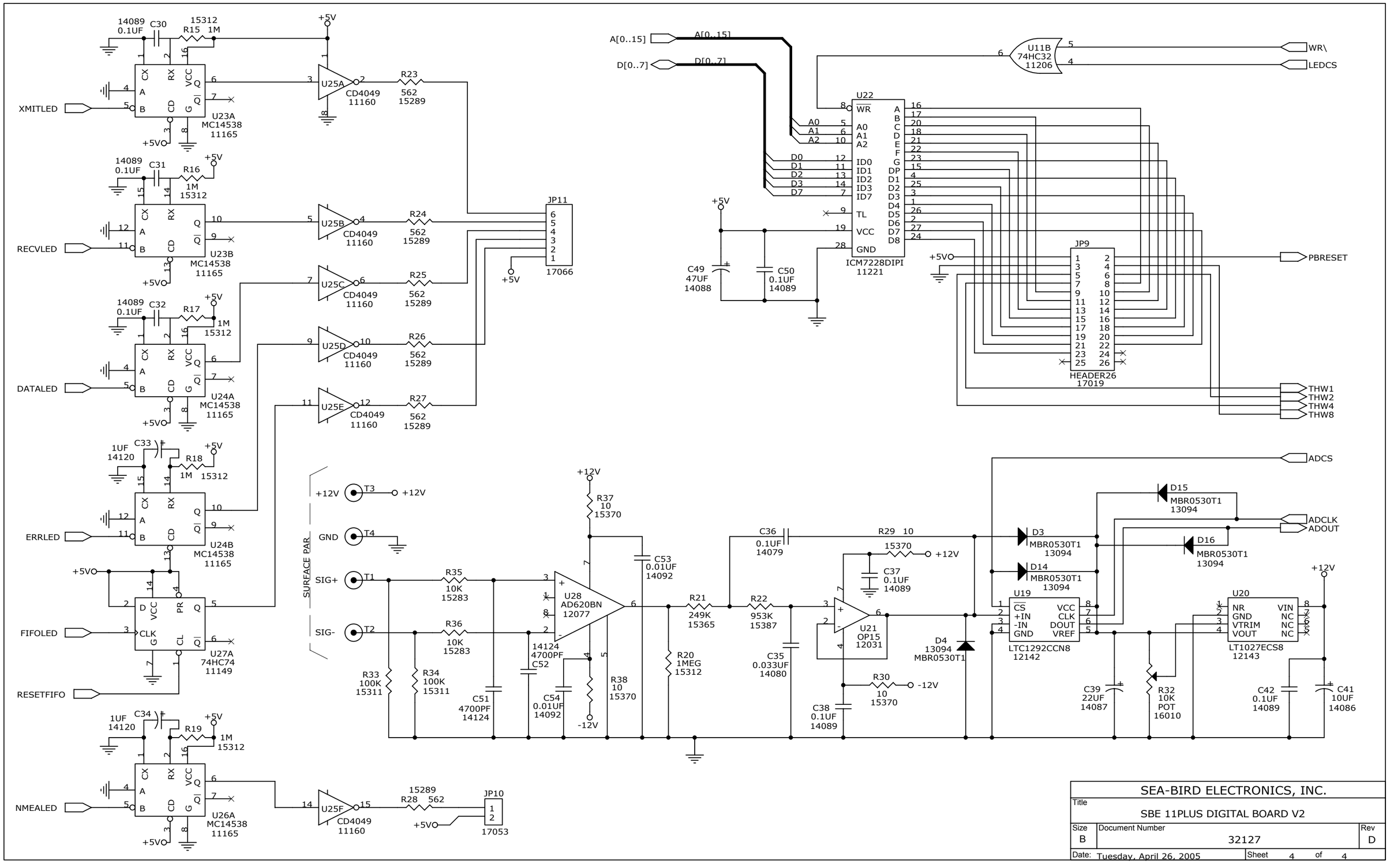

SEA-BIRD ELECTRONICS, INC.		
Title: SBE 11PLUS DIGITAL BOARD V2		
Size: B	Document Number: 32127	Rev: D
Date: Tuesday, April 26, 2005	Sheet 4 of 4	

SLB PRINTED ON 09:52:26 12 MAY 2005

DATE	SYM	REVISION RECORD	AUTH.	DR.	CK.
7/14/98	A	ECN553: PCB REV A	JB	DG	
7/13/99	B	ECN632: PCB REV B, U22	JB	DG	
6/14/00	C	ECN662: PCB C, SPAR DIFF AMP	JB	DG	
5/12/05	D	ECN841: PCB D, CHG U2,U6,U16	JB	DG	

PART. NUMBER..	DESCRIPTION.....	PACKAGE...	MKG.....	QPA.....	REF DESIG.....
40937D	SBE11plus DIGITAL BOARD /DWG 40937D				
10210D	PCB, SBE 11+, DIGITAL V2 /DWG 10210D			1.0000	PCB
11143	IC, MOTOROLA SRFC MNT, MC74HC138AD			2.0000	U8 U9
11147	IC, MOTOROLA SRFC MNT, MC74HC373ADW			1.0000	U7
11149	IC, MOTOROLA SRFC MNT, MC74HC74AD			1.0000	U27
11160	IC, MC14049BD, SRFC MNT			1.0000	U25
11165	IC, MC14538BDW, SRFC MNT			3.0000	U23 U24 U26
11166	IC, MAX708CSA, SRFC MNT			1.0000	U4
11170	IC, MM74HC04M HEX INVERTER, SRFC MNT			1.0000	U13
11175	IC, P51XAG30KBBD RMLSS 30MHZ CMRCL TEMP LQFP			1.0000	U5
11181	IC, LTC1383CS RS-232 INTRFC, SRFC MNT			2.0000	U1 U17
11183	IC, ZPSD312B-15J/ZPSD302B-90JI EPROM NO WNDW			1.0000	U12
11188	IC, P51XAG37KBA OTP 30MHZ CMRCL TEMP PLCC			1.0000	U3
11206	IC, MC74HC32AD, SRFC MNT MOTOROLA			1.0000	U11
11207	IC, 74HC245ADW, BUS TRANSCEIVER SRFC MNT			1.0000	U10
11208	IC XR-88C681CJ, DUAL UART SRFC MNT			1.0000	U15
11211	IC, TNT4882-BQ, GPIB CONTROLLER SRFC MNT			1.0000	U18
11221	IC, ICM7228DIPI, LED DRIVER			1.0000	U22
11231	IC, X24C16S8-2.7 OR 24LC16B, 16K EEPROM, SMT			2.0000	U2 U6
11236	IC, CY62256L-70SNC, 32K X 8 SRAM SRFC MNT			1.0000	U16
12031	IC, OP15EZ, OP AMP			1.0000	U21
12077	IC, AD620BN, DIFF AMP, ANALOG DEVICE			1.0000	U28
12081	IC, HP6N137 OPTO COUPLER			1.0000	ISO1
12142	IC, LTC1292CCN8, 5V 12 BIT A/D SYSTM			1.0000	U19
12143	IC, LT1027ECS8-5, 5V REF SRFC MNT			1.0000	U20
13089	DIODE, PHILIPS BAS16, SRFC MNT	SOT23-3	A6*	2.0000	D1 D2
13090	XISTOR, MOT BC847BLT1, SRFC MNT	SOT23-3	1F	2.0000	Q2 Q1
13094	DIODE, MBRO530T1 SCHTKY 30V 0.5A SRFC MNT	SOD123	B3	5.0000	D3 D4 D14 D15 D16
13108	DIODE, SMBJ12CA 12V BIDIRECTIONAL, SRFC MNT	SMB	LE	8.0000	D6 D7 D8 D9 D10 D11 D12 D13
14079	CAP, .1UF 5% NICHICON QYS1H104JTP			1.0000	C36
14080	CAP, .033 uf, 50V POLY, WESCO 32MPC-3302J05			1.0000	C35
14086	CAP, 10uf, TANT, 20V, 10%, 293D106X9020C2T			1.0000	C41
14087	CAP, 22uf, TANT, 20V, 10%, 595D226X9020C2T			1.0000	C39
14088	CAP, 47uf, TANT, 20V, 10%, 595D476X9020D2T			4.0000	C44 C45 C48 C49
14089	CAP, 0.1uF 50V 10% X7R NMC0805X7R104K50TRPLP			33.0000	C1 C2 C3 C4 C7 C8 C11 C12 C13 C14 C15 C16 C17 C18 C19 C20 C23 C24 C25 C26 C27 C28 C29 C30 C31 C32 C37 C38 C42 C43 C46 C47 C50
14092	CAP, .01uf, X7R, 50V, 10%, 08055C103KATMA			2.0000	C53 C54
14107	CAP, 8.2pf,NPO 100V +/- 0.5pf, 08051A8R2DATMA			1.0000	C22
14108	CAP, 22pf NPO 100V 10% 08051A220KATMA SRFC			5.0000	C5 C6 C9 C10 C21
14120	CAP, 1 uf, 20V 293D105X9020A2T, TANT SRFC MNT			2.0000	C33 C34
14124	CAP, 4700 pf, AVX 18121A472KATMA, CER NPO			2.0000	C51 C52
15283	RES, 10K, 1%, SRFC MNT, RK73H2B-10K			2.0000	R35 R36
15289	RES, 562 OHM, 1%, SRFC MNT, RK73H2B-562			6.0000	R23 R24 R25 R26 R27 R28
15311	RES, 100K, 1%, SRFC MNT, RK73H2B-100K			2.0000	R33 R34
15312	RES, 1M, 1% 1206 PKG RK73H2BLTD1004F SRFC MNT			6.0000	R15 R16 R17 R18 R19 R20
15326	RES, 4.7K OHM 5%, SRFC MNT, 1206			7.0000	R1 R2 R4 R5 R6 R7 R31
15328	RES, 47K OHM 5% 1206, SRFC MNT			5.0000	R3 R8 R9 R10 R11
15336	RES, 3.01K OHM 1% SRFC MNT 1206 PKG			1.0000	R14
15365	RES, 249K OHM 1%, SRFC MNT			1.0000	R21
15370	RES, 10 OHM 1%, 1206, SRFC MNT			4.0000	R29 R30 R37 R38
15387	RES, 953K OHM 1%, SRFC MNT 1206			1.0000	R22
15388	RES, 330 OHM 5%, SRFC MNT, 1206			1.0000	R12
15389	RES, 69.8 OHM 1%, SRFC MNT 1206			1.0000	R13
16010	POT, 10K OHM, TOP ADJ., BOURNS 3296W-1-103			1.0000	R32
17019	CONN, 26 PIN, ANSLEY 609-2627ES			2.0000	JP3 JP9
17020	CONN, 10 PIN, ANSLEY 609-1027ES			1.0000	JP1
17053	HEADER, 2 PIN, MOLEX 6373-22-11-2022			2.0000	JP8 JP10
17055	HEADER, 3 PIN, MOLEX 6373-22-11-2032			4.0000	JP4 JP5 JP6 JP7
17064	HEADER, 4 PIN, MOLEX 6373-22-11-2042			1.0000	JP2
17066	HEADER, 6 PIN, MOLEX 6373-22-11-2062			1.0000	JP11
17620	TERMINAL, 1/16' FORKED, CONCORD 12-471-2-01			10.0000	+5 -12 +12 T1 T2 T3 T4 GND ALARM- ALARM+
17647	TERMINAL, YELLOW TEST POINT, TP-105-05-04			2.0000	TP2 TP1
17649	TERMINAL, GREEN TEST POINT, TP-105-05-05			1.0000	G
17967	SOCKET, 44 PIN AUGAT PLCC, PCS-044A-1			2.0000	U12S U3S
18002	XTAL, 4.9152 MHZ, FOX 049/SVF49152			1.0000	Y2
18028	XTAL, FOXS/3.6864MHZ/30/50/0-+70/20pf			1.0000	Y3
18033	CRYSTAL, FOX 11.0592MHZ FOX115-20			1.0000	Y1
18036	XTAL, OSC, SG-615PH-40MHZ SRFC MNT			1.0000	U14
P40937D	ASSY, SRFC MNT SBE11plus DIGITAL BD /40937D			1.0000	

***

SEA-BIRD ELECTRONICS, INC			
PART NO. 40937D	BD SCALE 1.10	DRWN BY DG	
SCHEM 32127D	PL SCALE 0.90	APPR BY	
TITLE: SBE11plus DIGITAL BOARD, V2			
DATE 4/10/98	DWG NO. SH 1 OF 2 40937	REV D	

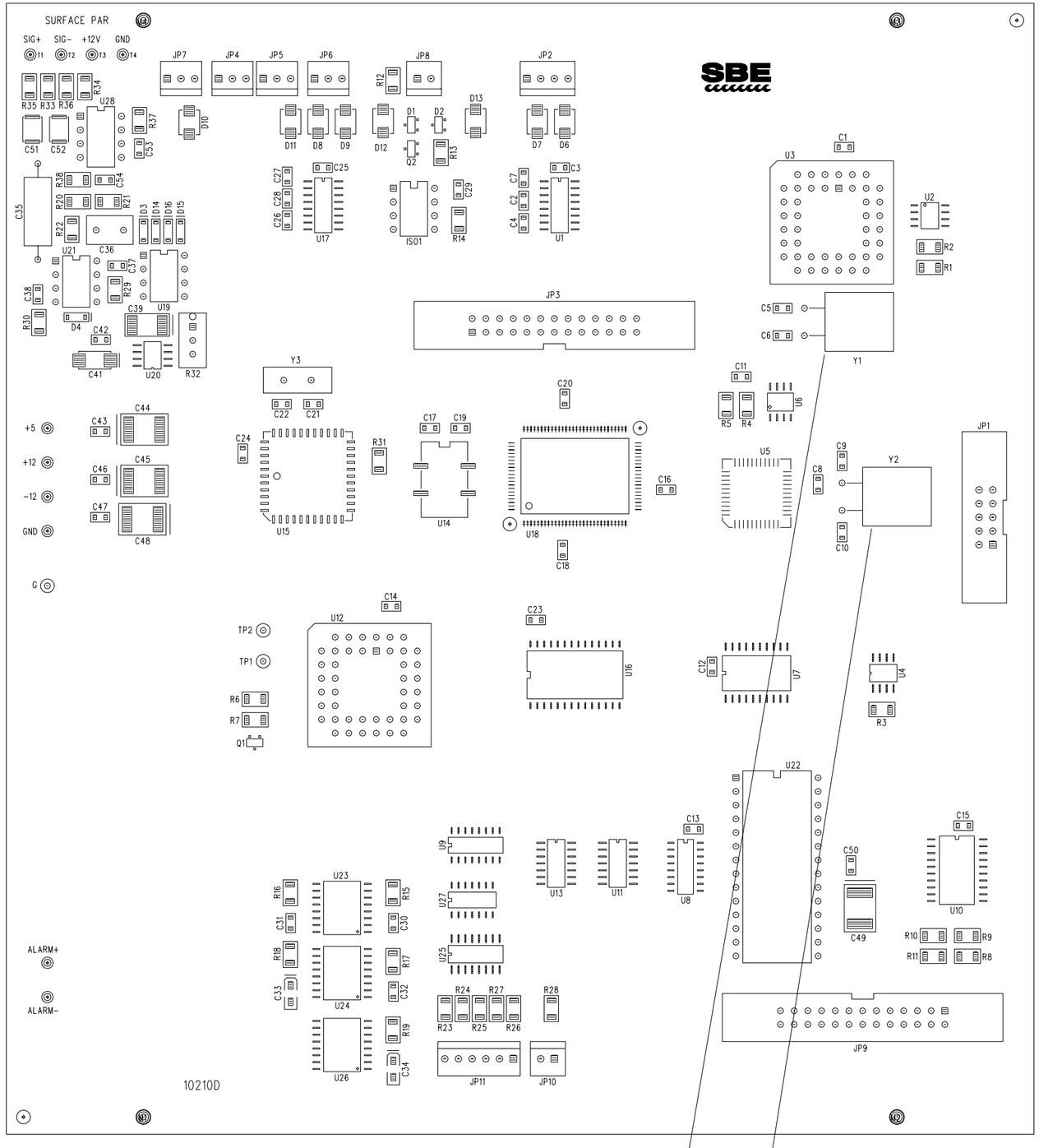

10210D TOP LAYER

DWG NO.	REV
SH 2 OF 2 40937	D

DATE	SYM	REVISION RECORD	AUTH.	DR.	CK.
4/91	—	ADDED REF DESIG			

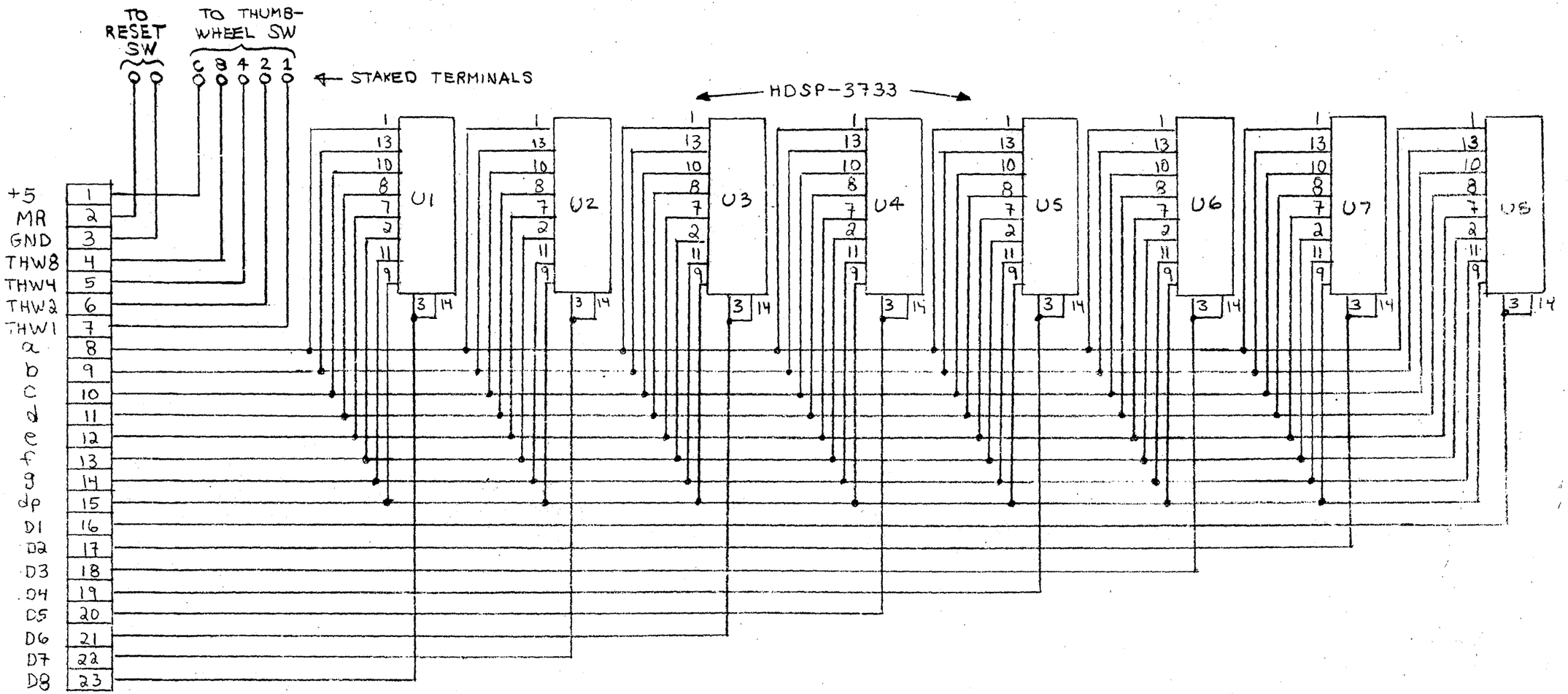

TOLERANCES (EXCEPT AS NOTED)	SEA-BIRD ELECTRONICS, INC.		
DECIMAL ±	40424	SCALE	DRAWN BY / APPROVED BY
FRACTIONAL ±	TITLE: SBE DECK UNIT FRONT PANEL LED'S		
ANGULAR ±	DATE: 1-26-83	DRAWING NUMBER: 30146	

K&E CRYSTALENE ® 11x17 ENGINEERS' STANDARD FORM

MADE IN U.S.A.

DATE	SYM	REVISION RECORD	AUTH.	DR.	CK.
11/6/91	A	ADDED NOTE	DG	BME	
12/5/94	B	CHG SIZE OF BOARD JP1 ON SOLDER SIDE	DW	BME	
1/17/97	C	JP1 CABLE DIRECTION	CT	DG	

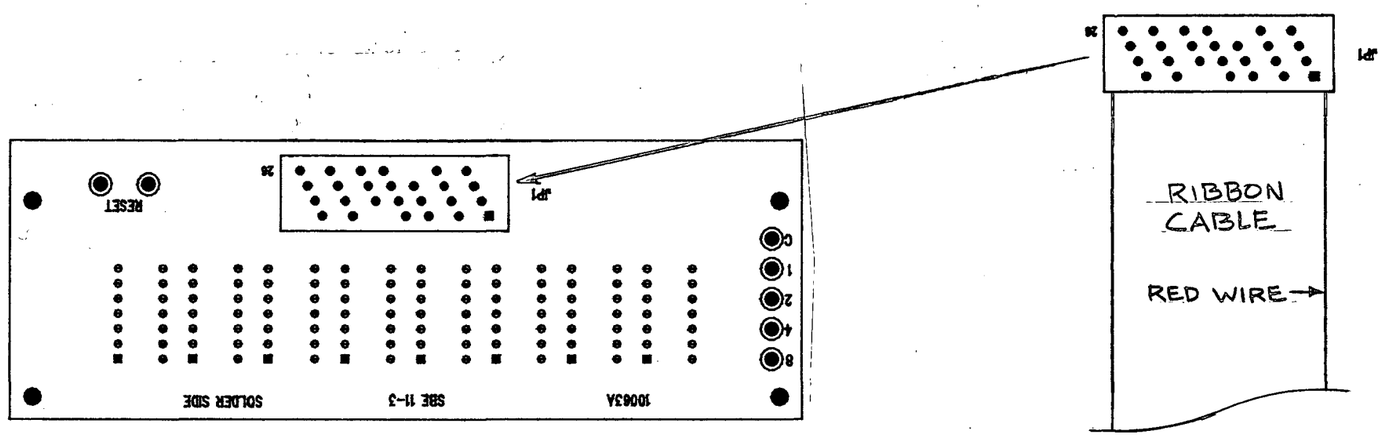

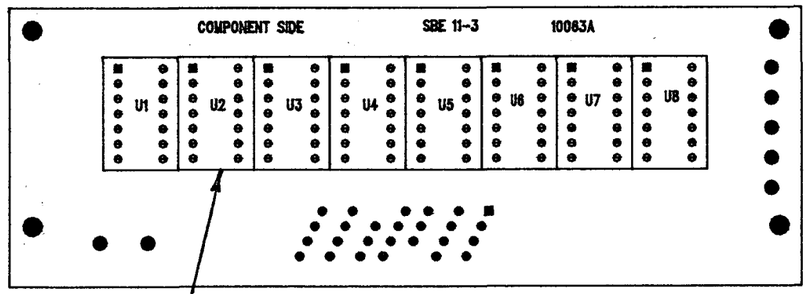

LEDBOARD SBE 11-3
10063A
COMPONENT SIDE

DECIMAL POINT TOWARDS THIS END - ALL LEDS

SLB PRINTED ON 15:04:43 20 JAN 1999

PART NUMBER.	DESCRIPTION.....	SRFC MNT QPA.....	ITM NBR REF DESIG..
80040	SBE11plus DECK UNIT LED ASSY /DWG 40424C		
17022	CABLE, LED, ANSLEY A-05429	1.0000	JP1
17072	TERMINAL, PCB, 1/16", CONCORD 12-206-2-01	7.0000	T1-T7
20005	LED, 8-SEGMENT, HP HDS-E103	8.0000	U1-U8
21021	PCB, LED DISPLAY, CTD DECK UNIT /DWG 10063A	1.0000	

***

TOLERANCES	SEA-BIRD ELECTRONICS, INC		
DECIMAL .XX .02 .XXX .010	P/N 30146	SCALE 3:2	DRAWN BY BME
FRACTIONAL ±	TITLE DECK UNIT LED BOARD		APPROVED BY
ANGULAR ±	DATE 4-9-91	DRAWING NUMBER 40424	REV C

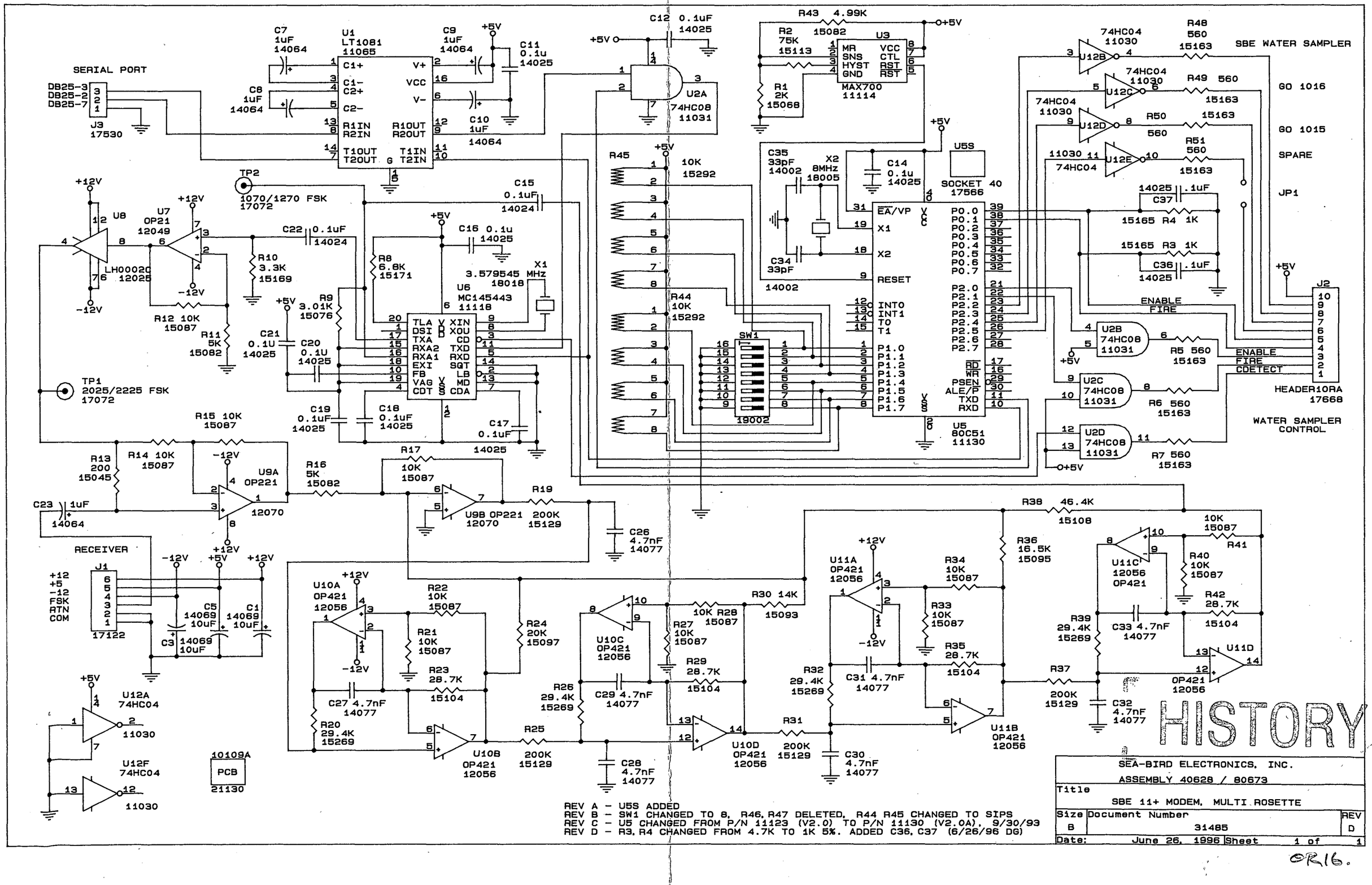

REV A – U5S ADDED
REV B – SW1 CHANGED TO 8, R46, R47 DELETED, R44 R45 CHANGED TO SIPS
REV C – U5 CHANGED FROM P/N 11123 (V2.0) TO P/N 11130 (V2.0A), 9/30/93
REV D – R3, R4 CHANGED FROM 4.7K TO 1K 5%. ADDED C36, C37 (6/26/96 DG)

HISTORY

SEA-BIRD ELECTRONICS, INC.		
ASSEMBLY 40628 / 80673		
Title: SBE 11+ MODEM, MULTI ROSETTE		
Size: B	Document Number: 31485	REV: D
Date: June 26, 1996	Sheet 1 of 1	

OR16.

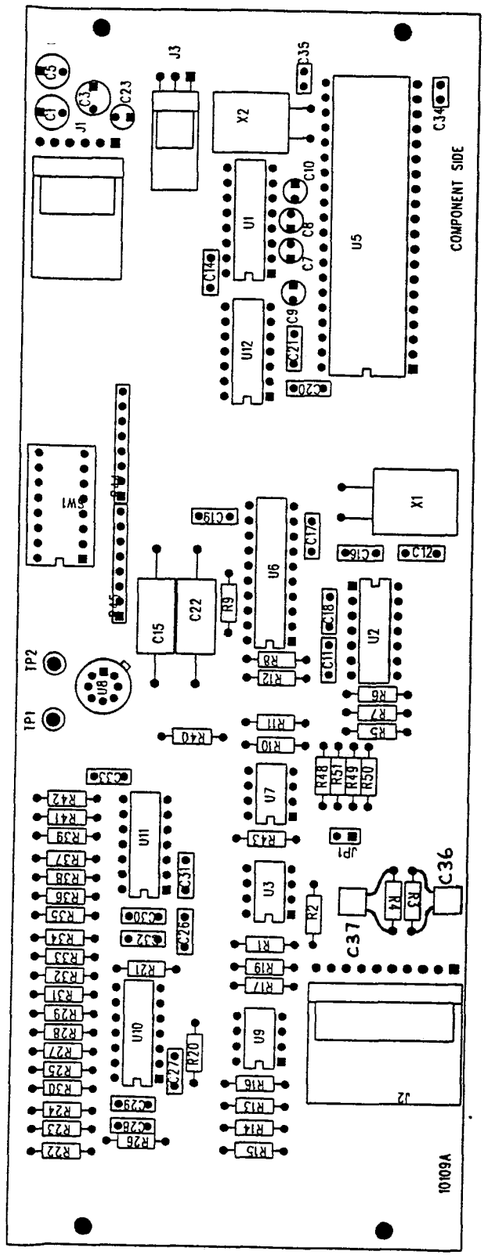

SLB PRINTED ON 05:39:29 27 JUN 1996

PART NUMBER.	DESCRIPTION	QPA	ITM NBR	REF DESIG
80673	SBE 11+ MODEM, MULTI-ROSETTE, /DWG 40628D			
11030	IC, 74HC04N	1.0000		U12
11031	IC, 74HC08N, QUAD 2-INPUT AND	1.0000		U2
11065	IC, LT1081CN, LINEAR TECH, RS232	1.0000		U1
11114	IC, MAXIM, MAX700CPA	1.0000		U3
11118	IC, MC145443P	1.0000		U6
11130	IC, V2.0C SBE 11+ MODEM, MULTI-ROSETTE PROC	1.0000		U5
12025	IC, LH0002CH, CURRENT AMP	1.0000		U8
12049	IC, OP21FP, OP AMP, FAST	1.0000		U7
12056	IC, OP421 HY OP AMP	2.0000		U10 U11
12070	IC, OP221GZ, PMI, OP AMP	1.0000		U9
14002	CAP, 33 pf, 100V CER, SR151A330KAA, NPO	2.0000		C35 C34
14024	CAP, .1 uf, 80V POLYESTER, 192P104X9080	2.0000		C22 C15
14025	CAP, .1 uf, 100V CER, SR211C104KAA, X7R	11.0000		C11 C12 C14 C16 C17 C18 C19 C20 C21 C36 C37
14064	CAP, 1 uf, 35V DIPPED TANT. T350A105K035AS	5.0000		C7 C8 C9 C10 C23
14069	CAP, 10 uf, 20V DIPPED TANT, T350E106K020AS	3.0000		C1 C3 C5
14077	CAP, 4700 pf, SR211A472JAA AVX	8.0000		C26 C27 C28 C29 C30 C31 C32 C33
15001.2	JUMPER WIRE, 2 POSITION	1.0000		JP1
15045	RES, 200 OHM, 1%, 1/4 W	1.0000		R13
15068	RES, 2.0K OHM, 1%, 1/4 W	1.0000		R1
15076	RES, 3.01K OHM, 1%, 1/4 W	1.0000		R9
15082	RES, 4.99K OHM, 1%, 1/4 W	3.0000		R11 R16 R43
15087	RES, 10K OHM, 1%, 1/4 W	12.0000		R12 R14 R15 R17 R21 R22 R27 R28 R33 R34 R40 R41
15093	RES, 14.0K OHM, 1%, 1/4 W	1.0000		R30
15095	RES, 16.5K OHM, 1%, 1/4 W	1.0000		R36
15097	RES, 20K OHM, 1%, 1/4 W	1.0000		R24
15104	RES, 28.7K OHM, 1%, 1/4 W	4.0000		R23 R29 R35 R42
15108	RES, 46.4K OHM, 1%, 1/4 W	1.0000		R38
15113	RES, 75K OHM, 1%, 1/4 W	1.0000		R2
15129	RES, 200K OHM, 1%, 1/4 W	4.0000		R19 R25 R31 R37
15163	RES, 560 OHM, 5%, 1/4 W	7.0000		R5 R6 R7 R48 R49 R50 R51
15165	RES, 1K OHM, 5%, 1/4 W	2.0000		R3 R4
15169	RES, 3.3K OHM, 5%, 1/4 W	1.0000		R10
15171	RES, 6.8K OHM, 5%, 1/4 W	1.0000		R8
15269	RES, 29.4K OHM, 1%, 1/4 W	4.0000		R20 R26 R32 R39
15292	RES-NET, 10K X 4, SIP, CSC08A03103G	2.0000		R44 R45
17072	TERMINAL, PCB, 1/16", USECO 2520B-1	2.0000		TP2 TP1
17122	HEADER, 6 PIN RT < MOLEX	1.0000		J1

PART NUMBER.	DESCRIPTION	QPA	ITM NBR	REF DESIG
	22-12-2064 RA			
17530	HEADER, 3 PIN R< MOLEX 22-12-2034	1.0000		J3
17566	SOCKET, 40 PIN, LO-PRO, AUGAT 540-AG11D	1.0000		U5S
17668	HEADER, 10 PIN RT< MOLEX 22-12-2104 RA	1.0000		J2
18005	XTAL, 8 MHZ, MP-1-8.000000	1.0000		X2
18018	XTAL, FOX036S, 3.57954 MHZ	1.0000		X1
19002	DIP SW, 8 POS, AMP #4-435626-2	1.0000		SW1
21130	PCB, SBE 11+ MODEM, MULTI ROSETTE, /10109A	1.0000		PCB

***

DATE	SYM	REVISION RECORD	AUTH.	DR.	CK.
5/3/93	B	ADDED 8 SW DIP,10K SIPS	DJM		
5/30/96	C	changed U5 to 11130	B.A	B.A	
7/1/96	D	R3, R4, C36, C37	JB	DG	

HISTORY

TOLERANCES	SEA-BIRD ELECTRONICS, INC		
FRACTIONAL	P/N 80673	SCALE	DRAWN BY DJM APPROVED BY
DECIMAL	TITLE SBE 11+ MODEM, MULTI-ROSSETE		
ANGULAR	DATE 5/3/93	DRAWING NUMBER 40628	REV D

DATE	SYM	REVISION RECORD	AUTH.	DR.	CK.
1/92	A	DELETE BUSHING		BMC	
6/92	B	ADD DIM TABLE			

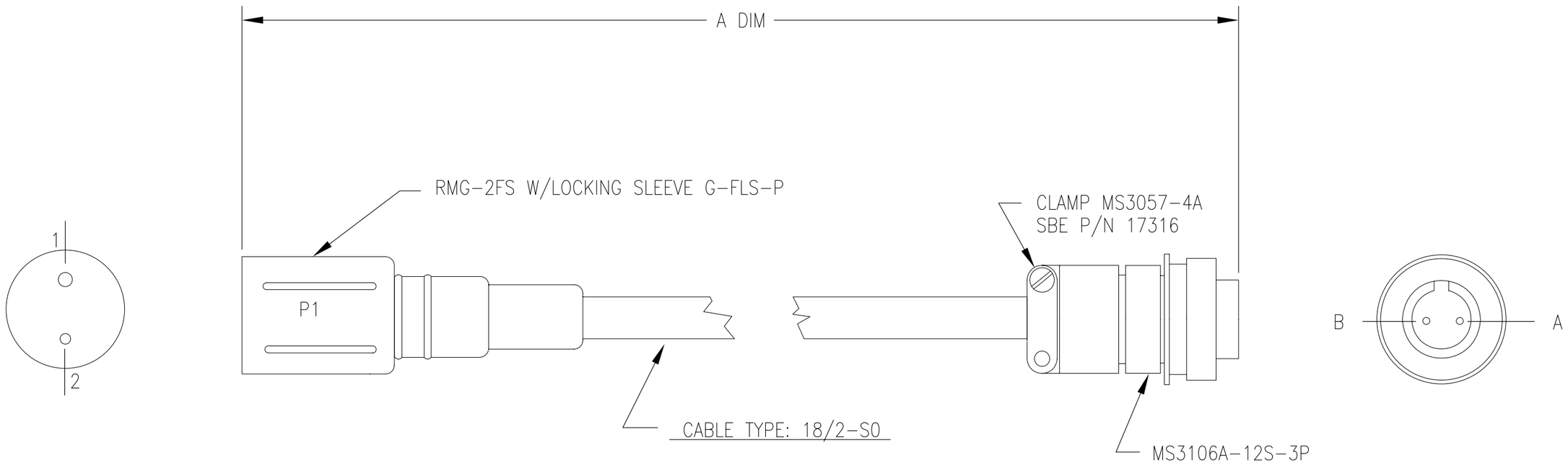

SBE PN	DIM A	PIGTAIL PN DWG 30579
80591	8 FT	17028
80620	50 FT	17605
80813	20 FT	17860
80903	150 FT	17942
80915	33 FT	17963
801039	10 FT	17305
801414	13 FT	171767
801488	120 M	171911
801537	66 FT	172010
801578	50 M	172073
801631	100 FT	172162
801818	100 M	172465

WIRING CONNECTIONS		
P1	COLOR	P2
PIN 1	WHITE	A
PIN 2	BLACK	B

TOLERANCES	SEA-BIRD ELECTRONICS, INC			
FRACTIONAL	P/N SEE TABLE	SCALE NTS	DRAWN BY BMC	
			APPROVED BY KDL	
DECIMAL	TITLE TEST CABLE, SBE 911 PLUS			
ANGULAR	DATE 12/91	DRAWING NUMBER 31314	REV B	

DATE	REV	REVISION RECORD	AUTH.	DR.	CK.
1.22.03	A	SWITCHED WIRE COLORS	CB	KLP	
8.1.07	B	CHANGED CABLE TYPE	CB	PC	

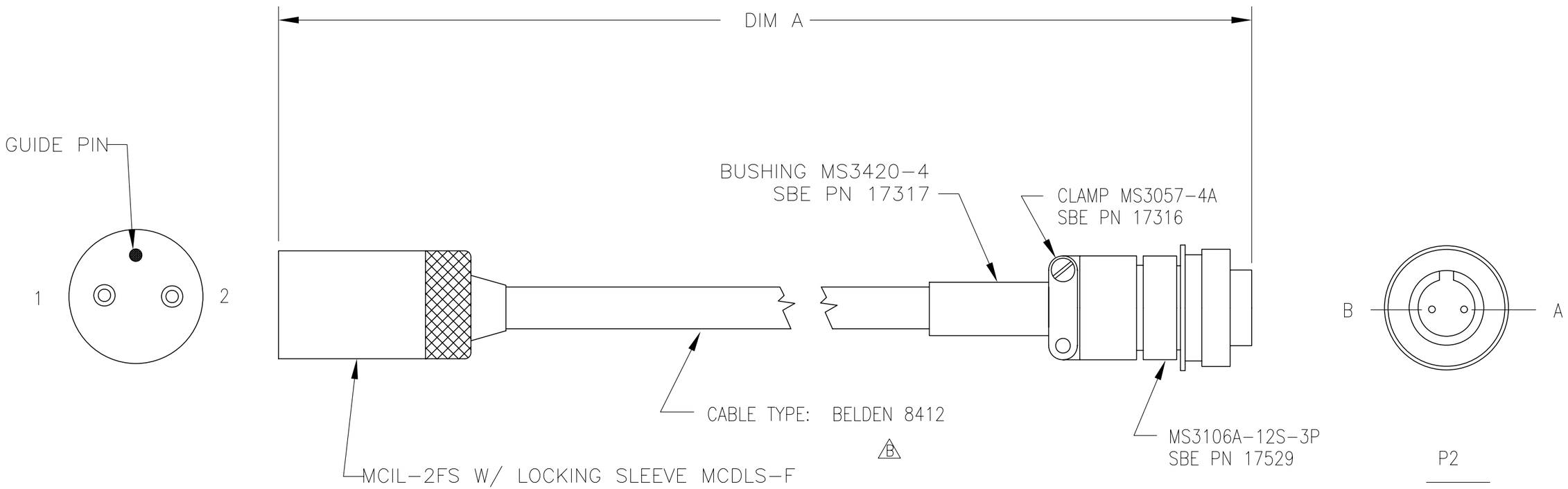

ASSY PN	PIGTAIL PN *	DIM A	
801363	171512	8 FT	2.5 M
801587	172105	33 FT	10 M
801738	172350	150 FT	46 M

* PIGTAIL DWG 32514

WIRING CONNECTIONS		
P1 MCIL-2FS	COLOR	P2
PIN 1	WHITE A	A
PIN 2	BLACK A	B

TOLERANCES	SEA-BIRD ELECTRONICS, INC		
FRACTIONAL	P/N SEE TABLE	SCALE NTS	DRAWN BY KLP APPROVED BY
DECIMAL	TITLE TEST CABLE, SBE 911 PLUS, SUBCONN		
ANGULAR	DATE 7.31.02	DRAWING NUMBER 32695	REV B

DATE	SYM	REVISION RECORD	AUTH.	DR.	CK.
5.16.03	A	FIXED PIN CALLOUTS	CB	KLP	
02.09.07	B	ADDED PN TABLE	CB	PL	

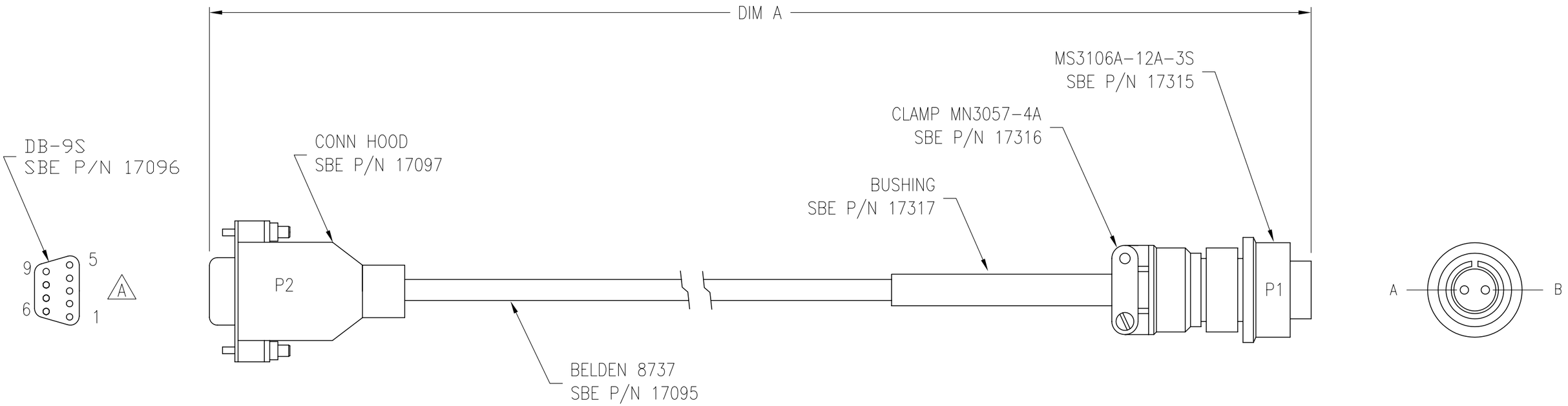

CABLE PN	DIM A		B
801422	6 FT	1.8 m	
801703	75.5 FT	23 m	

P1 MS3106A-12S-3S	P2 DB-9S	COLOR
PIN A	PIN 3	RED
PIN B	PIN 5	BLK

TOLERANCES	SEA-BIRD ELECTRONICS, INC		
FRACTIONAL	P/N SEE TABLE	SCALE NTS	DRAWN BY KLP
			APPROVED BY
DECIMAL	TITLE NMEA TEST CABLE, 11PLUS/33/36		
ANGULAR	DATE 4/09/03	DWG NO. 32786	REV B

DATE	SYM	REVISION RECORD	AUTH.	DR.	CK.
5.16.03	A	FIXED PIN CALLOUTS	CB	KLP	

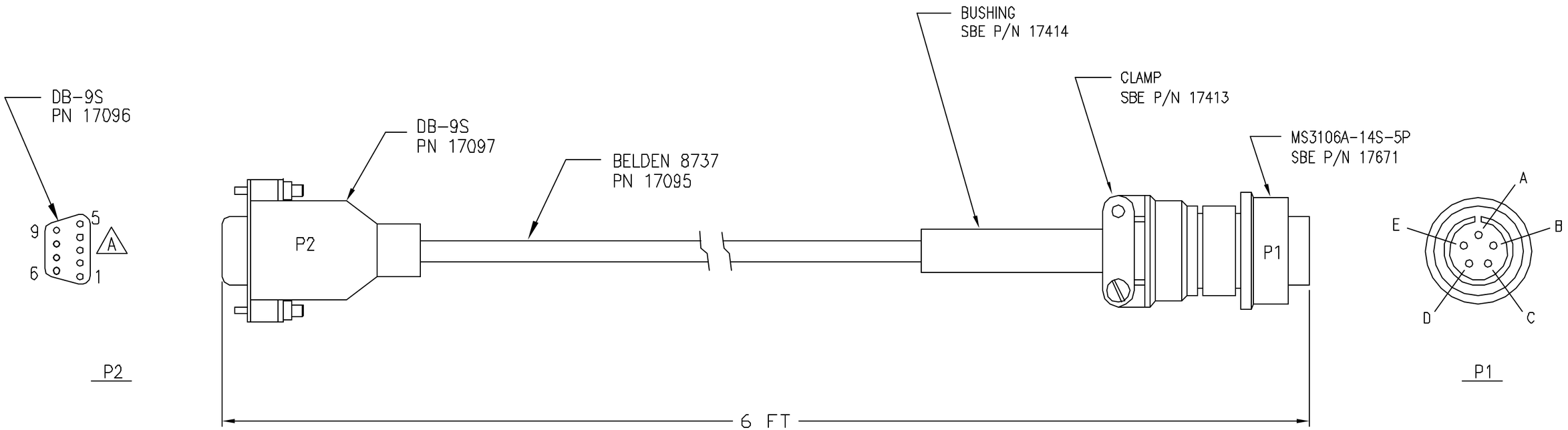

P1 MS3106A-14S-5P	P2 DB-9S	COLOR
PIN A	PIN 5	SHIELD
PIN B	PIN 3	RED
PIN C	PIN 2	BLK

TOLERANCES	SEA-BIRD ELECTRONICS, INC			
FRACTIONAL	P/N 801429	SCALE NTS	DRAWN BY KLP	
			APPROVED BY	
DECIMAL	TITLE SBE 11plus CDO TEST CABLE			
ANGULAR	DATE 4.29.03	DWG NO. 32799	REV A	

DATE	SYM	REVISION RECORD	AUTH.	DR.	CK.
06.00	A	Change pin C, add note	MJ	CB	

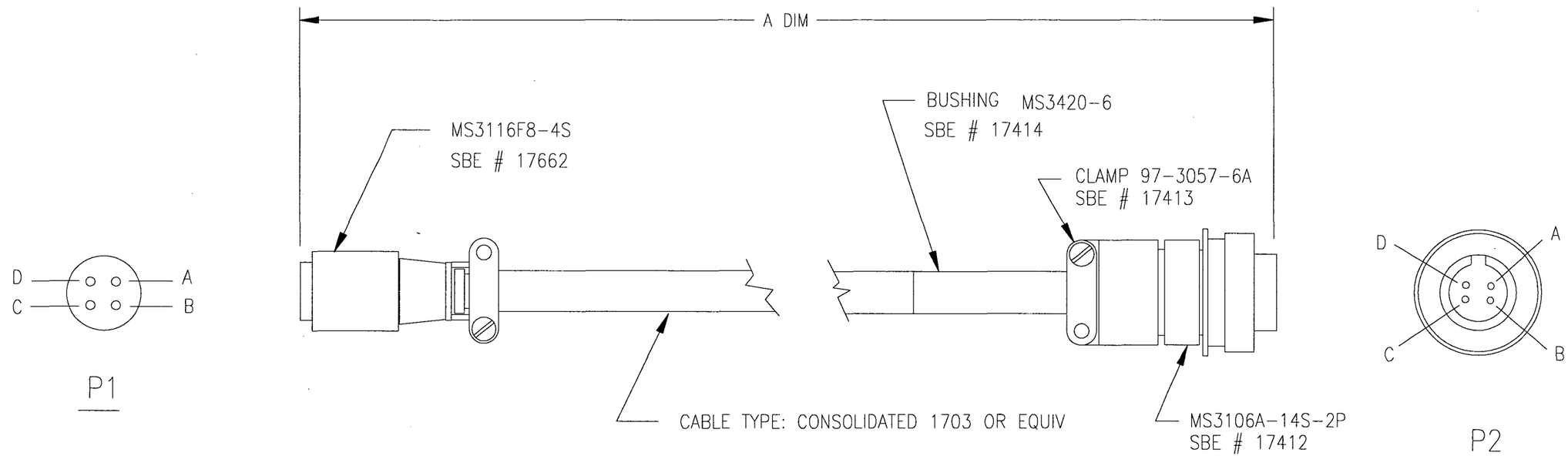

* NOTE: Connect P2 / A & C to P1 / A at P1 connector.
DO NOT JUMPER AT P2 CONNECTOR.

P1	COLOR	P2	DESCRIPTION
A	SHIELD/WHITE	A, C *	GROUND
B	BLACK	B	+12V PWR
C	–	–	N/C
D	RED	D	PAR SIGNAL

PART NO.	A DIM
80665	30 METERS
80666	50 METERS

TOLERANCES	SEA-BIRD ELECTRONICS, INC		
FRACTIONAL	P/N SEE TABLE	SCALE 1:1	DRAWN BY BMC APPROVED BY
DECIMAL	TITLE SURFACE PAR TO SBE 11 CABLE JOBS 7306 & 5635		
ANGULAR	DATE 1/11/93	DRAWING NUMBER 31475	REV A

DATE	SYM	REVISION RECORD	AUTH.	DR.	CK.
11.00	A	CORRECTED WIRING	MJ	CB	
8/06	B	CORRECTED WIRING	CB	CB	

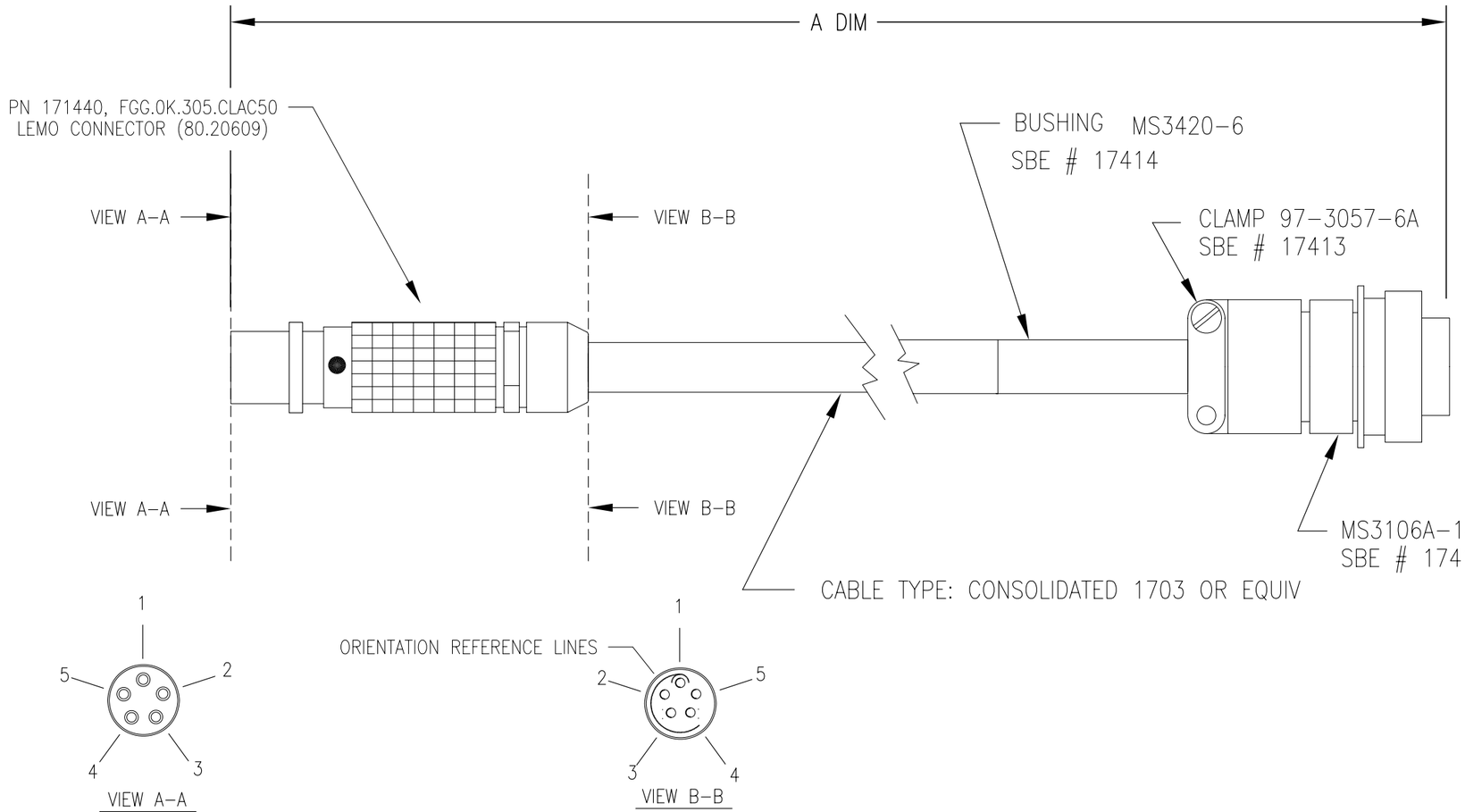

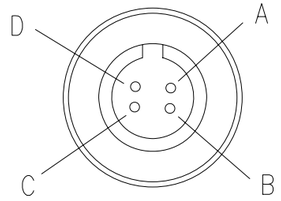

P2

P1	COLOR	P2	DESCRIPTION
1	SHIELD/WHITE	A	GROUND
2	---	–	---
3	RED	D	PAR SIGNAL
4	WHITE	C	GROUND
5	BLACK	B	+12V POWER

PART NO.	A DIM
801238	30 METERS
801239	50 METERS

TOLERANCES	SEA-BIRD ELECTRONICS, INC		
FRACTIONAL	P/N SEE TABLE	SCALE 1:1	DRAWN BY MJ APPROVED BY CB
DECIMAL	TITLE CABLE: SURFACE PAR to SBE11plus (LEMO)		
ANGULAR	DATE 08.10.00	DRAWING NUMBER 32434	REV B

DATE	REV	REVISION RECORD	AUTH.	DR.	CK.

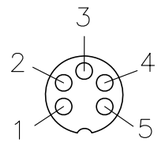

P1

VIEW A–A

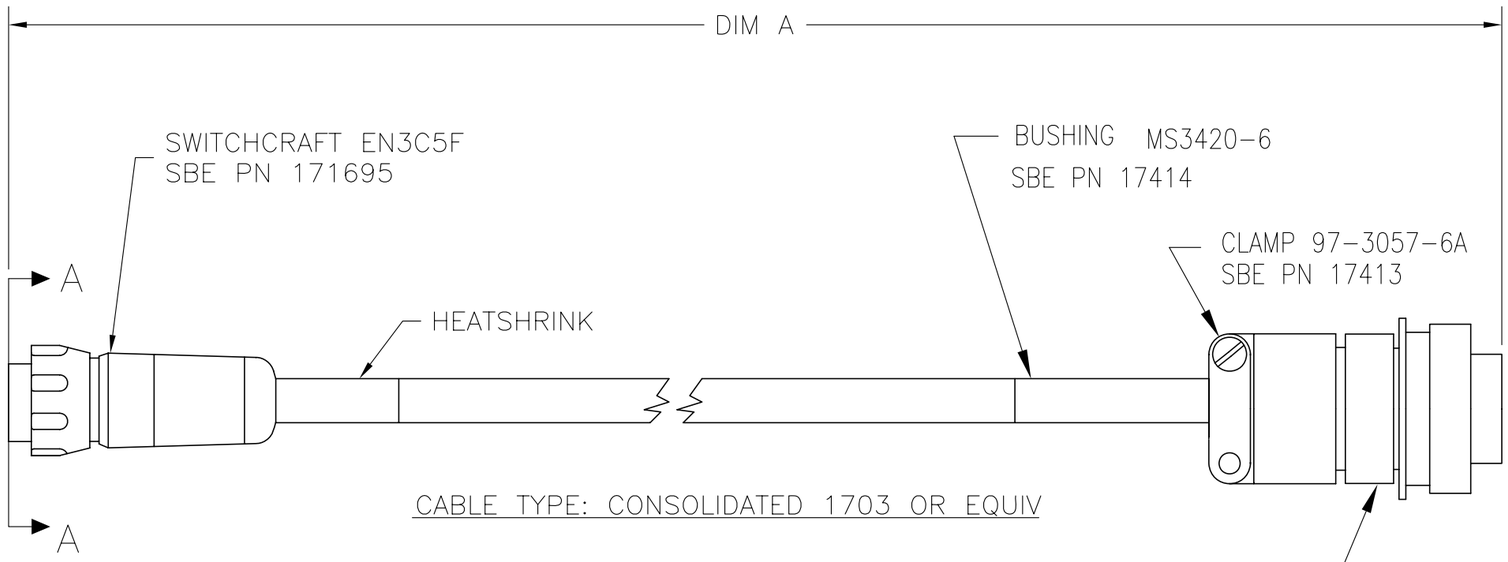

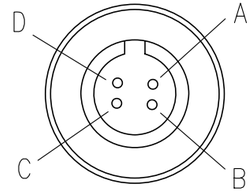

P2

P1 EN3C5F	COLOR	P2	DESCRIPTION
1	SHIELD	C	POWER GROUND
2	RED	D	PAR SIGNAL
3	WHITE	A	SIGNAL GROUND
4	BLACK	B	+12V POWER
5	---	–	---

SBE PN	DIM A
801367	15 m (50 FT)
801368	30 m (100 FT)
801369	50 m (165 FT)
801375	40 m (132 FT)
801457	35 m (116 FT)
801644	20 m (66 FT)
801849	1 m (3 FT)

TOLERANCES	SEA-BIRD ELECTRONICS, INC			
FRACTIONAL	P/N SEE TABLE	SCALE NTS	DRAWN BY KLP	
			APPROVED BY CB	
DECIMAL	TITLE CABLE: SURFACE PAR to SBE11plus (SWITCHCRAFT)			
ANGULAR	DATE 8.28.02	DRAWING NUMBER 32704		REV

DATE	SYM	REVISION RECORD	AUTH.	DR.	CK.
2/04	A	CORRECT DB25P PN	CB	CB	

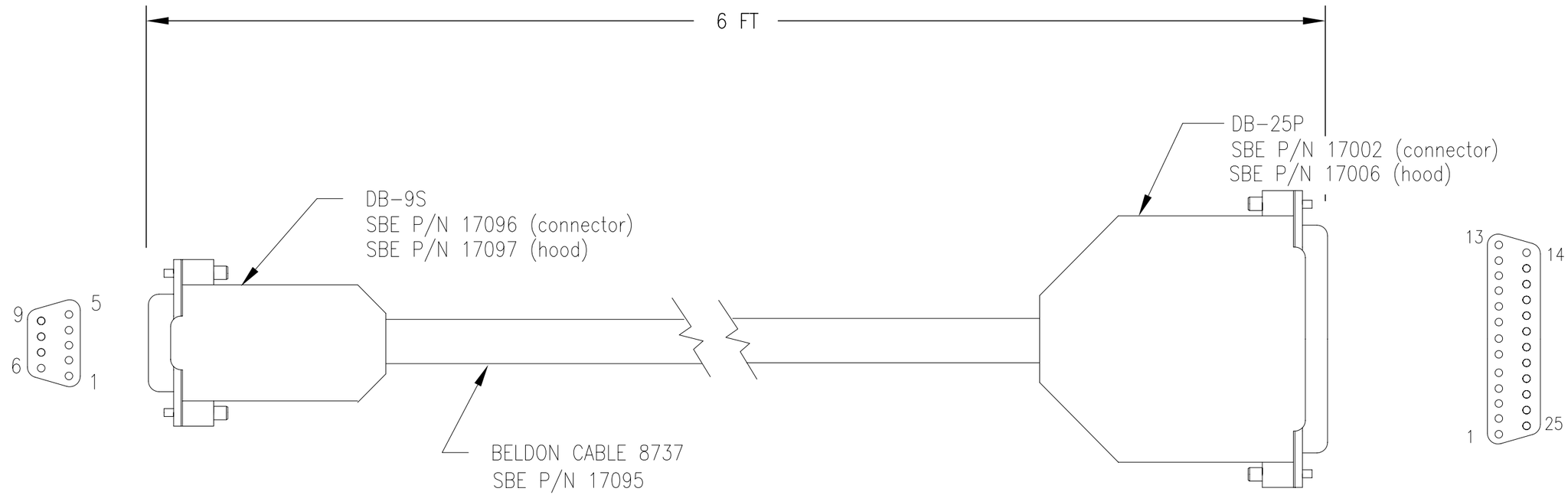

P1 DB-9S	COLOR	P2 DB-25P
PIN 5	SHIELD	PIN 7
PIN 3	BLACK	PIN 2
PIN 2	RED	PIN 3

SBE PN	DIM A
801419	6 FT

TOLERANCES	SEA-BIRD ELECTRONICS, INC		
FRACTIONAL	P/N SEE TABLE	SCALE 1:1	DRAWN BY CWB APPROVED BY
DECIMAL	TITLE CABLE ASSY, DB-25P TO DB-9S		
ANGULAR	DATE 4/03	DRAWING NUMBER 32784	REV A

DATE	SYM	REVISION RECORD	AUTH.	DR.	CK.

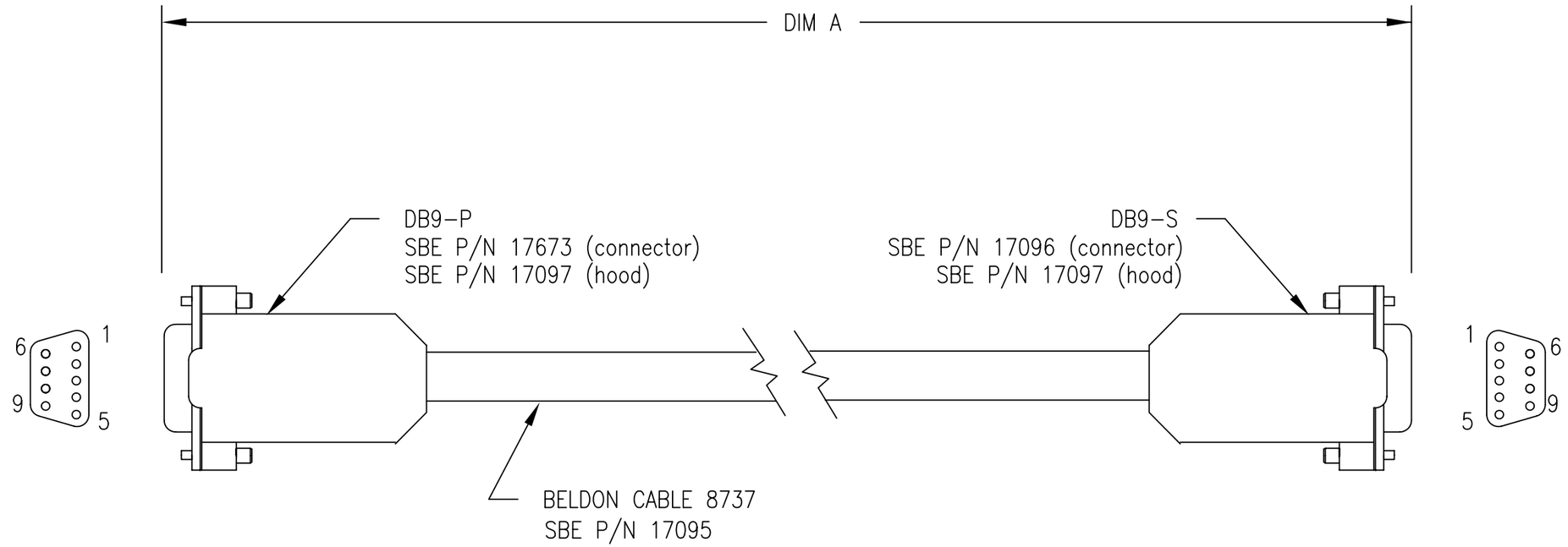

P1 DB9-P	COLOR	P2 DB-9S
PIN 5	SHIELD	PIN 5
PIN 2	RED	PIN 3
PIN 3	BLACK	PIN 2

SBE PN	DIM A
801428	6 FT

TOLERANCES	SEA-BIRD ELECTRONICS, INC		
FRACTIONAL	P/N SEE TABLE	SCALE NTS	DRAWN BY CB APPROVED BY
DECIMAL	TITLE CABLE ASSY, SERIAL UPLINK		
ANGULAR	DATE 04/28	DRAWING NUMBER 32798	REV

DATE	SYM	REVISION RECORD	AUTH.	DR.	CK.

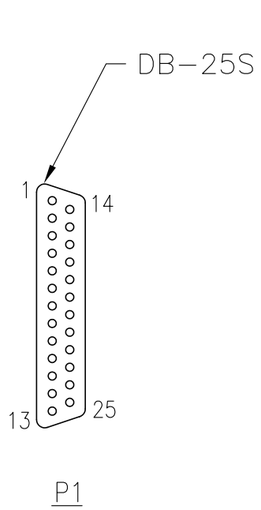

P1

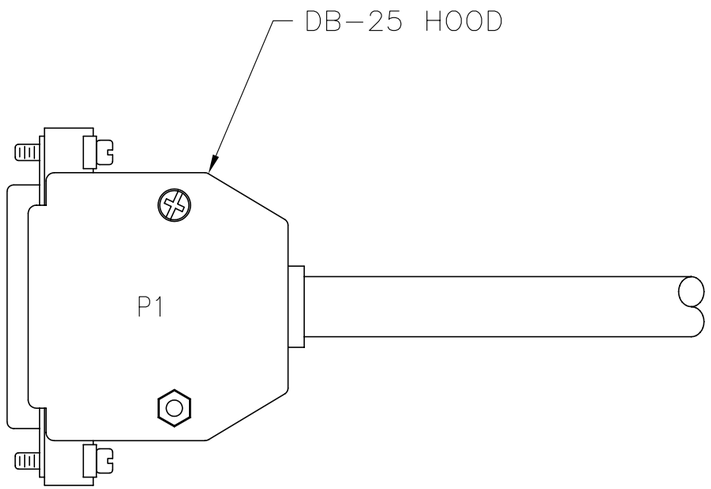

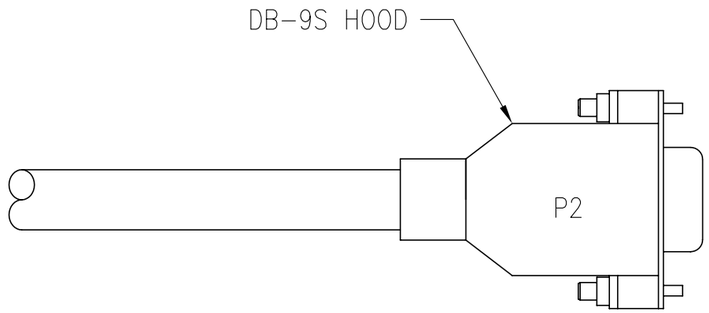

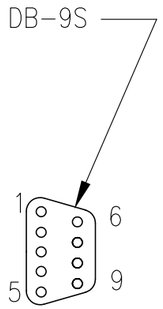

P2

P1 DB-25S	P2 DB-9S
PIN 8	PIN 1
PIN 3	PIN 2
PIN 2	PIN 3
PIN 20	PIN 4
PIN 7	PIN 5
PIN 6	PIN 6
PIN 4	PIN 7
PIN 5	PIN 8
PIN 22	PIN 9

SBE PN	DIM A
17130	10 IN

TOLERANCES	SEA-BIRD ELECTRONICS, INC		
FRACTIONAL	P/N SEE TABLE	SCALE –	DRAWN BY KLP APPROVED BY
DECIMAL	TITLE CABLE, ADAPTER DB-25 TO DB-9S		
ANGULAR	DATE 11.18.02	DWG NO. 32739	REV

WARRANTY POLICY 2006

5-YEAR LIMITED WARRANTY (NEW PRODUCTS)

For a period of five years after the date of original shipment from our factory, products manufactured by Sea-Bird are warranted to function properly and be free of defects in materials and workmanship. Should a Sea-Bird instrument fail during the warranty period, return it freight pre-paid to our factory. We will repair it (or at our option, replace it) at no charge, and pay the cost of shipping it back to you. Certain products and components have modified coverage under this warranty as described below.

LIMITED WARRANTY ON SERVICE & REPAIRS

Service work, repairs, replacement parts and modifications are warranted to be free of defects in materials or workmanship for the remainder of the original 5-year warranty or one year from the date of shipment from our factory after repair or service, which ever is longer. Certain products and components have modified coverage under this warranty as described below.

MODIFICATIONS / EXCEPTIONS / EXCLUSIONS

1. The SBE 43 DO sensor is warranted to function properly for 5 years. Under normal use however, the electrolyte in an SBE 43 DO sensor will require replenishment after about 3 years. Purchase of an SBE 43 includes one free electrolyte replenishment (as necessitated by chemical depletion of electrolyte) anytime during the warranty period. To obtain the replenishment, return the sensor freight pre-paid to our factory. We will refurbish it for free (electrolyte refill, membrane replacement, and recalibration) and pay the cost of shipping it back to you. Membrane damage or depletion of electrolyte caused by membrane damage is not covered by this warranty.

2. Because pH and other dissolved oxygen (DO) electrodes have a limited life caused by the depletion of their chemical constituents during normal storage and use, our warranty applies differently to such electrodes. Electrodes in SBE 13Y and 23Y DO sensors, SBE 18 pH sensors, and SBE 27 pH/ORP sensors are covered under warranty for the first 90 days only. Other components of the sensor are covered for 5 years.

3. Equipment manufactured by other companies (e.g., fluorometers, transmissometers, PAR, optical backscatter sensors, altimeters, etc.) are warranted only to the limit of the warranties provided by their original manufacturers (typically 1 year).

4. Batteries, zinc anodes or other consumable/expendable items are not covered under this warranty.

5. Electrical cables and dummy plugs are warranted to function properly and be free of defects in materials and workmanship for 1 year.

6. This warranty is void if in our opinion the instrument has been damaged by accident, mishandled, altered, improperly serviced, or repaired by the customer where such treatment has affected its performance or reliability. In the event of such misuse/abuse by the customer, costs for repairs plus two-way freight costs will be borne by the customer. Instruments found defective should be returned to the factory carefully packed, as the customer will be responsible for freight damage.

7. Incidental or consequential damages or costs incurred as a result of product malfunction are not the responsibility of SEA-BIRD ELECTRONICS, INC

Warranty Administration Policy

Sea-Bird Electronics, Inc. and its authorized representatives or resellers provide warranty support only to the original purchaser. Warranty claims, requests for information or other support, and orders for post-warranty repair and service, by end-users that did not purchase directly from Sea-Bird or an authorized representative or reseller, must be made through the original purchaser. The intent and explanation of our warranty policy follows:

1. Warranty repairs are only performed by Sea-Bird.

2. Repairs or attempts to repair Sea-Bird products performed by customers (owners) shall be called *owner repairs*.

3. Our products are designed to be maintained by competent owners. Owner repairs of Sea-Bird products will NOT void the warranty coverage (as stated above) simply as a consequence of their being performed.

4. Owners may make repairs of any part or assembly, or replace defective parts or assemblies with Sea-Bird manufactured spares or authorized substitutes without voiding warranty coverage of the entire product, or parts thereof. Defective parts or assemblies removed by the owner may be returned to Sea-Bird for repair or replacement within the terms of the warranty, without the necessity to return the entire instrument. If the owner makes a successful repair, the repaired part will continue to be covered under the original warranty, as if it had never failed. Sea-Bird is not responsible for any costs incurred as a result of owner repairs or equipment downtime.

5. We reserve the right to refuse warranty coverage *on a claim by claim basis* based on our judgment and discretion. We will not honor a warranty claim if in our opinion the instrument, assembly, or part has been damaged by accident, mishandled, altered, or repaired by the customer *where such treatment has affected its performance or reliability*.

6. For example, if the CTD pressure housing is opened, a PC board is replaced, the housing is resealed, and then it floods on deployment, we do not automatically assume that the owner is to blame. We will consider a claim for warranty repair of a flooded unit, subject to our inspection and analysis. If there is no evidence of a fault in materials (e.g., improper or damaged o-ring, or seal surfaces) or workmanship (e.g., pinched o-ring due to improper seating of end cap), we would cover the flood damage under warranty.

7. In a different example, a defective PC board is replaced with a spare and the defective PC board is sent to Sea-Bird. We will repair or replace the defective PC board under warranty. The repaired part as well as the instrument it came from will continue to be covered under the original warranty.

8. As another example, suppose an owner attempts a repair of a PC board, but solders a component in backwards, causing the board to fail and damage other PC boards in the system. In this case, the evidence of the backwards component will be cause for our refusal to repair the damage under warranty. However, this incident will NOT void future coverage under warranty.

9. If an owner's technician attempts a repair, we assume his/her qualifications have been deemed acceptable to the owner. The equipment owner is free to use his/her judgment about who is assigned to repair equipment, and is also responsible for the outcome. The decision about what repairs are attempted and by whom is entirely up to the owner.

Service Request Form

To return your instrument for calibration or other service, please take a few moments to provide us with the information we need, so we can serve you better.

PLEASE:

1. **Get a Returned Material Authorization (RMA) number from Sea-Bird (*phone 425-643-9866, fax 425-643-9954, or email seabird@seabird.com*). Reference the RMA number on this form, on the outside shipping label for the equipment, and in all correspondence related to this service request.**
2. **Fill out 1 form for each type (model) of instrument.**
3. **Include this form when shipping the instrument to Sea-Bird for servicing.**
4. **Fax us a copy of this form on the day you ship.** ***FAX: (425) 643-9954***

RETURNED MATERIAL AUTHORIZATION (RMA) NUMBER: _____

DATE EQUIPMENT REQUIRED BY: _____

DO YOU REQUIRE A WRITTEN QUOTE? _____

CONTACT INFORMATION

Your name: _____

Institution/Organization/Company: _____

Shipping/Delivery address for packages: _____

_____

_____

Telephone: _____ Fax: _____

e-mail: _____

SERVICE INFORMATION

Date Shipped: _____

Sea-Bird Model Number (for example, SBE 37-SM): _____

Quantity: _____

Serial Numbers: _____

_____

_____

(**Note**: **Specify instrument serial numbers below** if specific services are required for some instruments. For example, if 10 instruments are being returned for calibration, and 1 of the 10 also requires repairs, specify the serial number for the instrument requiring repairs in the appropriate section of the form.)

SEASOFT Version you have been using with this instrument(s): _____

[ ] Calibration Services:

___Calibration (includes basic diagnostic):

___Temperature ___Conductivity ___Pressure ___DO ___pH

(Please allow a minimum of 3 weeks after we receive the instrument(s) to complete calibration.)

___Other (specify): _____

_____

[ ] Internal Inspection and O-Ring Replacement (includes hydrostatic pressure test):

Additional charges may apply.

_____

_____

[ ] System Upgrade or Conversion:

Specify (include instrument serial number if multiple instruments are part of shipment): _____

_____

_____

[ ] Diagnose and Repair Operational Faults:

Please send a disk containing the raw data (.hex or .dat files) that shows the problems you describe. Also send the .con files you used to acquire or display the data.

Problem Description (continue on additional pages if needed; include instrument serial number if multiple instruments are part of shipment): _____

_____

_____

_____

PAYMENT/BILLING INFORMATION

Credit Card: Sea-Bird accepts payment by VISA, MasterCard, or American Express.

[ ] MasterCard [ ] Visa [ ] American Express

Account Number: _____ Expiration Date: _____

Credit Card Holder Name (printed or typed): _____

Credit Card Holder Signature: _____

Credit Card Billing Address (if different than shipping address):

_____

_____

_____

Invoice/Purchase Order: If you prefer us to invoice you, please complete the following or enclose a copy of your Purchase Order:

Purchase Order Number: _____

Billing Address (if different than shipping address):

_____

_____

_____

Instructions for Returning Goods to Sea-Bird

1. **Domestic Shipments (USA) - Ship prepaid** (via UPS, FedEx, DHL, etc.) directly to:
   Sea-Bird Electronics, Inc.
   1808 136th Place NE
   Bellevue, WA 98005, USA
   Telephone: (425) 643-9866 Fax: (425) 643-9954
2. **International Shipments** –
   Option A. Ship via **PREPAID AIRFREIGHT to SEA-TAC International Airport (IATA Code "SEA")**:
   Sea-Bird Electronics, Inc.
   1808 136th Place NE
   Bellevue, WA 98005, USA
   Telephone: (425) 643-9866 Fax: (425) 643-9954 E-mail: seabird@seabird.com

   Notify: MTI Worldwide Logistics for Customs Clearance
   Seattle, WA, USA
   Telephone: (206) 431-4366 Fax: (206) 431-4374 E-mail: bill.keebler@mti-worldwide.com

   E-mail flight details and airway bill number to seabird@seabird.com and bill.keebler@mti-worldwide.com when your shipment is en-route. Include your RMA number in the e-mail.

   Option B. Ship via **EXPRESS COURIER directly to Sea-Bird Electronics**:
   If you choose this option, **we recommend shipping via UPS, FedEx, or DHL**. Their service is door-to-door, including customs clearance. It is not necessary to notify our customs agent, MTI Worldwide, if you ship using a courier service.

   E-mail the airway bill / tracking number to seabird@seabird.com when your shipment is en-route. Include your RMA number in the e-mail.

   For All International Shipments:
   Include a **commercial invoice** showing the description of the instruments, and **Value for Customs purposes only**. Include the following statement:
   "U.S. Goods Returned for Repair/Calibration. Country of Origin: USA. Customs Code: 9801001012."
   Failure to include this statement in your invoice will result in US Customs assessing duties on the shipment, which we will in turn pass on to the customer/shipper.

Note: Due to changes in regulations, if Sea-Bird receives an instrument from outside the U.S. in a crate containing non-approved (i.e., non-heat-treated) wood, we will return the instrument in a new crate that meets the requirements of ISPM 15 (see http://www.seabird.com/customer_support/retgoods.htm for details). We will charge for the replacement crate based on the dimensions of the crate we receive, determined as follows:

1. Multiply the crate length x width x height in centimeters (overall volume in cm^3, not internal volume).
2. Determine the price based on your calculated overall volume and the following chart:

Overall Volume (cm^3)	< 52,000	52,000 to < 65,000	65,000 to < 240,000	> 240,000
Example Instrument	37-SM MicroCAT	SEACAT, no cage	CTD in cage	--
Price (USD)	$45	$70	$125	consult factory

These prices are valid only for crate replacement required in conjunction with return of a customer's instrument after servicing, and only when the instrument was shipped in a crate originally supplied by Sea-Bird.